SAMPLE - DO NOT REMOVE

STANDARDS DEVELOPMENT BRANCH OMOE
36936000004157

17TH ONTARIO INDUSTRIAL WASTE CONFERENCE

JUNE 7-10, 1970
NIAGARA FALLS, ONTARIO

PROCEEDINGS

TD
897.5
.O57
1970
MOE

Water management in Ontario

SPONSORED BY
ONTARIO WATER RESOURCES COMMISSION

Copyright Provisions and Restrictions on Copying:

This Ontario Ministry of the Environment work is protected by Crown copyright (unless otherwise indicated), which is held by the Queen's Printer for Ontario. It may be reproduced for non-commercial purposes if credit is given and Crown copyright is acknowledged.

It may not be reproduced, in all or in part, for any commercial purpose except under a licence from the Queen's Printer for Ontario.

For information on reproducing Government of Ontario works, please contact ServiceOntario Publications at copyright@ontario.ca

17TH ONTARIO INDUSTRIAL WASTE CONFERENCE

JUNE 7-10, 1970
NIAGARA FALLS, ONTARIO

Water management in Ontario

SPONSORED BY
ONTARIO WATER RESOURCES COMMISSION

TD
897.5
.O57
1970

17th Ontario waste
management conference :
proceedings /
76601

C O N T E N T S

Page

Preface
Mr. D. S. Caverly,
Ontario Water Resources Commission
Toronto, Ontario. 1

A Management Attitude Towards Water Conservation 3
T. A. McIver,
Technical Superintendent,
Shell Canada Limited,
Corunna, Ontario.

From Problem to Solution with ABS Polymer Wastewater 11
Donald M. Robinson,
Pollution Control Specialist,
Development Division,
Borg-Warner Chemicals and Plastics Group,
Parkersburg, West Virginia, U. S. A.

Dennis R. Bolten,
Waste Control Engineer,
Marbon Division,
Borg-Warner Chemicals and Plastics Group,
Washington, West Virginia, U. S. A.

Treatment of Distillery Wastes - A Case History 30
F. H. Bellstedt, B.Sc.,
Assistant Distillery Manager,
R. K. Nethercott,
Chemical Technologist,
Corby Distilleries Limited,
Corbyville, Ontario.

Conservation, Reclamation and Re-Use of Solids and Water, in Potato Processing 42
P. E. Cansfield,
Associate Professor,
R. A. Gallop,
Professor,
Department of Food Science,
University of Manitoba,
Winnipeg 19, Manitoba.

Page

Submersible Recording Current and Water Quality Meters 53

M. D. Palmer,
Environmental Engineer,
Ontario Water Resources Commission,
Toronto, Ontario.

Reverse Osmosis - A Review of Its Applications to Waste Treatment 67

A. Golomb,
Research Scientist,
F. Besik,
Research Engineer,
Ontario Research Foundation,
Sheridan Park, Ontario.

A Novel Ion Exchange Process for Chemical Recovery and Pollution Abatement 98

D. Craig,
Research Director,
C. D. Logan,
Assistant Director,
Chemical Research,
The Ontario Paper Company Limited,
Thorold, Ontario.

Application of Automatic Sampling to Today's Water Quality Control Programs 109

C. Fred Gurnham,
President,
Gurnham and Associates, Inc.,
Chicago, Illinois.

Martha I. Beach,
Vice-President,
N-CON Systems Company, Inc.,
Larchmont, New York.

Minewater Treatment - INCO Sudbury District Operations 119

C. Ferguson,
M. Morris,
Mining and Smelting Division,
The International Nickel Company of Canada Limited,
Copper Cliff, Ontario.

Page

Deep-Bed Filtration of Steel Mill Effluents 133
E. S. Savage,
Manager,
Research and Development,
Water and Waste Treatment Department,
Dravo Corporation,
Pittsburgh, Pennsylvania.

Biological Survey of the Effects of Uranium Milling Wastes on the Water Quality of the Serpent River Basin 157
N. Conroy,
Biologist,
Ontario Water Resources Commission,
Toronto, Ontario.

A Practical Approach to the Filtration of Metal Hydroxides 178
R. S. Cuthbertson,
Senior Engineer,
E. B. Hettwer,
Senior Chemist,
Northern Electric Company Limited,
London, Ontario.

Chrysler Canada Ltd. Industrial Waste Treatment Plant, Windsor, Ontario 194
D. O. Osmun,
Manager,
Construction and Facility Engineering,
Chrysler Canada Ltd.,
Windsor, Ontario.

Operational Growing Pains of an Industrial Waste Treatment Plant 214
H. G. Cox,
Manager,
Plant Engineering,
RCA Limited,
Midland, Ontario.

PREFACE

D. S. Caverly,
General Manager,
Ontario Water Resources Commission.

As in previous years the Proceedings of the 1970 Industrial Waste Conference have been printed and distributed to those who attended the Conference as well as to other interested parties. As one reviews the papers which are contained herein, the impression gained by many of us at the time of the Conference is strongly confirmed: there is today a more positive attitude on the part of industry towards the need for pollution control than has ever been revealed in the past. Furthermore, though pollution problems considered at the Conference were invariably shown to be complex, the papers which were presented and the discussions which followed indicated that many difficult industrial waste problems are being successfully tackled. Industry today is making extensive commitments in the field of pollution control through the purchase and installation of expensive equipment and through the application of technical know-how towards the solution of treatment problems. A conference of this type enables us to share in the benefits of this expertise.

This year's Conference - the seventeenth to date - was attended by over 350 delegates. I hope that it was a profitable and enjoyable experience for you and that we shall have the pleasure of welcoming you back again next year.

Conference Chairman.

SESSION CHAIRMAN,
MR. WARREN J. GRANT,
GULF OIL CANADA LIMITED,
TORONTO.

"A MANAGEMENT ATTITUDE TOWARDS WATER CONSERVATION"

BY

T. A. McIVER, TECHNICAL SUPERINTENDENT

SHELL CANADA LIMITED, CORUNNA, ONTARIO.

In a speech presented to the Mens' Canadian Club of Toronto last January, Dr. F. Kenneth Hare, Professor of Geography and Physics at the University of Toronto, stated "Pollution is only superficially a matter of technology. At root it is the product of social irresponsibility, of mass shoulder shrugging." Dr. Hare continued "I don't think we should see this as a temporary situation that we can quickly put right by minor controls - by putting curbs on a few makers of smells and poisoners of fish. It is our whole urban and industrial system that is responsible."

I am certain that we will concur with Dr. Hare. However, as members of either industry, regulatory bodies or academic institutions, we must define our personal role in environmental conservation, relative to the average man on the street, such as a store clerk or a bank teller. I say this from the viewpoint, that providing the average citizen assumes his responsibility to this social problem, through payment of taxes for items such as improved sewage treatment facilities or support for regulatory bodies - what more can we expect from him? However, we here today can participate effectively at a much higher level and, therefore, must shoulder a larger share of this survival challenge. We are the plant managers, the equipment engineers, the regulatory auditors, the developers of new abatement techniques. We cannot shrug our shoulders or glance sideways for someone else to step forward. We are the doctors of this waste byproduct epidemic.

Unfortunately, there are no aspirins or wonder drugs to soothe or eliminate this pollution sickness. It is a problem where, by and large, the physical means of correction await our beckoning. It is a problem wherein our efforts towards success must begin with the establishment of a realistic involvement "attitude". "Attitude" is the key word. In the case of industry, attitude on the corporate level, attitude on the plant management level, and attitude in the minds of the hourly paid workers. Delays on the part of management to appropriate necessary funds to correct known pollution sources is partly an attitude problem, in the same sense as the plant operator who carelessly opens contaminating wastes to receiving waters. We must first correct the attitude insensibility and then step by step work towards making each individual plant a conservation success as well as a financial success.

At the Shell Canada Limited Corunna refinery, environmental conservation has always been a prime management objective. This plant commenced operations in the summer of 1952 and it is of interest to note that one of the first biological treaters to be installed in Canada for processing phenolic waste waters was commissioned at this location in 1955. Over the past few years, operations at the refinery have expanded rapidly. With these expansions, it became necessary to update and enlarge existing effluent handling facilities. Aside from the committing of capital, our approach to institute a more effective "attitude" pollution abatement programme included establishing a joint management/worker understanding as to the importance of pollution prevention, providing a meaningful program to keep operating personnel pollution conscious on a day-to day basis, and training for all personnel in the ways and means of confining and cleaning up spills if and when they occur. The purpose of this paper is to describe in some detail the nature of equipment changes that have occurred or will occur and to discuss our approach in establishing a healthy abatement attitude in the minds of our operating personnel to receive their full involvement and cooperation.

Our refinery is located at Corunna, on the east shore of the St. Clair River, approximately ten miles downstream of the City of Sarnia. The St. Clair drains the upper Great Lakes at an average flow of 177,000 cubic feet per second or about 90 billion Imperial gallons per day. This represents approximately 25 Imperial gallons of potable water each day for every man, woman and child in the world. Obviously this is a tremendous natural asset that must be maintained not only for today's requirements but also for use by future generations.

Industry in the Chemical Valley uses water from the St. Clair predominantly for process cooling on a once-through basis. Total circulation is bout 330 million Imperial gallons per day, or enough to satisfy the water demands of a city of about two million population. The Shell refinery alone uses an average of 50 million Imperial gallons per day returning well over 95 percent back to the river. We may say that we are in the oil refining business, but as you can see, most certainly we are also in the water handling business, about 28 gallons for every gallon of crude processed. Our objective is to use this water and return it to the St. Clair in a condition equivalent to intake purity or at least meeting O.W.R.C. quality criteria.

In speaking of objectives in the realm of environmental control, again we are talking about an attitude factor. Objectives invariably end up in terms of capital expenditures requiring in most cases approval on the corporate level. Without a realistic corporate policy, that is, a positive and community responsible corporate attitude, the establishing of objectives becomes an exercise in frustration and futility. In this regard, Shell Canada has publicly issued an eight-point corporate policy which reads as follows:

"Shell Canada shares a nation-wide concern for intelligent protection of the quality of this country's air, water and soil."

With this in mind, the company:

1. Strives for the best practical environmental conditions in all its operations which affect the community and animal and plant life, as well as the company's facilities and personnel.

2. Considers protection of the quality of air, water and soil, and control of light and noise level, as community obligations which are part of the cost of doing business.

3. Will cooperate:

   (a) With other interested parties in the development of waste disposal techniques and improved methods of measurement and control.

   (b) With governments,other industries and associations for the establishment of realistic waste disposal criteria and standards which relate to our own operations or the use of our products.

4. Will comply with all pertinent conservation regulatory control requirements and, where technically and economically feasible, will better these requirements.

5. Will try to anticipate future control limits and plan to meet them.

6. Uses the most modern methods to avoid spills and loss of product.

7. In the control of residues, looks always for ways to use such material and considers disposal of them as waste only as a last resort.

8. Will keep employees, regulatory authorities, and the public informed about our activities in this domain.

This statement from our corporate management clearly establishes the company's philosophy on environmental conservation. It tells us that there is no room for complacency and that both our day to day and long

term efforts must be directed towards utilizing the benefits of technology without irreparably damaging our environment. To this end - we at the plant level are carrying the ball - we must anticipate needs - we must initiate and advise - we must develop sound engineering recommendations - and, once approved, we must institute our planning as quickly as possible.

When asked to present this paper, Mr. Voege requested that I include information on the design, construction and operation of new treatment facilities. I shall now do this, but only briefly, as time does not allow an in-depth review. As part of the initial design in 1952, waste water from the plant was segregated by use. With regard to process cooling, which uses about 42 of the total 50 million IG/D, two water return systems were established on the basis of the pressure on the hydrocarbon side of heat exchangers relative to the cooling water supply pressure. In the first system, exchangers with the hydrocarbon side pressure at least five pounds per square inch below the water side were connected to a return header referred to as "clean water". Clean water, about 22 million IGD, is discharged directly to the river. This is valid in that there is no possibility of contamination since an exchanger leak would result only in cooling water entering the oil side. The second system, called "potentially oily water", included exchangers having the oil side pressure greater than the water side. With these exchangers, a leak would definitely result in oil contamination of return water and, consequently, such waters were routed through a circular separator prior to discharge. A third system was designated as "oily water" and consisted of waters that actually contacted oil or originated from operations where there was a high risk of contamination, such as from water wash vessels, pump cooling or crude oil desalters. All oily water, prior to discharge, was treated in a circular gravity separator equipped with a rotating oil skimmer. A fourth system called "storm water" collected all rain water surface drainage and routed it through the potentially oily water separator.

With the recent tempo of expansion activities, hydraulic loads on the two separators increased such that oil removal efficiencies became borderline and concern developed with regard to the system's ability to confine major spills or upsets within our fenced property. To correct these weaknesses, we embarked on a detailed study of our entire process and storm water systems. These investigations not only looked at today's requirements, but included allowances for all foreseeable process additions during the next ten years. Furthermore, to ensure adequate provisions for changes to current O.W.R.C. water quality criteria, early in the study a meeting was held with O.W.R.C. officials to review their philosophy regarding future control limits.

The outcome of this comprehensive oil confinement study was an oil abatement modernization package totalling some three-quarters of a million dollars. In this package, $250,000 was provided to install a new potentially oily water separator basin, $250,000 was allotted for a new potentially oily water trunk sewer connecting the process area to the new separator, and $250,000 was included for an air flotation unit to treat effluent from the oily water separator.

The new potentially oily water separator was designed to American Petroleum Institute standards. For an ultimate flow of 20,000 IGPM, or 29 million IGD, these standards resulted in a basin 125 feet in length, 120 feet in width, and a water depth of 7-½ feet. For maintenance purposes, the separator is divided with a centre wall walkway into two 60 feet wide bays, each providing a colume of 355,000 imperial gallons for a design retention time of 35 minutes. The new potentially oily water trunk sewer spans a distance of almost 1900 feet starting on the north side of our process complex and ending at the new separator. Pipe size consists of 370 feet of 60 inch diameter, 1050 feet of 48 inch diameter and about 300 feet of smaller sizes. The separator/sewer system was commissioned last September and operation to date has been very satisfactory.

With regard to the new air flotation unit, the installation consists of two parallel basins, each 14 feet in width, 70 feet in length, with a water depth of six feet. At the design flow rate of 2300 IGPM plus one-third recycle, overall retention time is some 25 minutes. This unit is currently under construction and should be commissioned within the next week or so. Initially, we do not intend to use chemical flocculating agents. However, we have not overlooked this possible future need, and therefore the equipment as purchased has provisions to handle chemical addition.

In passing, I would like to mention that one of the early design premises established in our program was to provide adequate retention time to confine the impact of plant upsets or spills to within our refinery. The O.W.R.C. strongly emphasized the fact that although upsets in any one plant in the Sarnia area may cause only infrequent and minor contamination of the St. Clair River, when one considered the number of plants and complexity of operations, the possibility of frequent spills in total is high and, therefore, urged all industries to give greater attention to the retention capability of effluent handling facilities. With this thought in mind, the treated water from the air flotation unit will be routed to a new potentially oily water separator prior to discharge. At the 2300 IGPM design flow rate, the final system arrangement will provide a total of 2-½ hours of retention for all oily water. This should be more than adequate to bring all oil upsets under control and prevent escape to receiving waters.

Not part of the oil abatement program, but still an important step in our overall objective to improve environmental conservation aspects of our operations, was the installation of a salt brine pond in the summer of last year. Some 2400 feet below the Sarnia area lie thick layers of almost pure rock salt. Many industries in the community drill into this salt and wash out caverns for storage of hydrocarbon products. At our refinery, we have three such caverns, totalling about 350,000 barrels in capacity. To obtain stored hydrocarbon, the procedure was to pump water into the cavern to displace oil to the surface. However, when oil was returned, the salt contaminated water was in turn displaced to the surface and routed to our separators for discharge to the river. During hydrocarbon storage periods, this procedure increased the level of dissolved solids in our effluent. To resolve this problem, we installed

a 10 million gallon saturated brine pond at a cost of approximately $110,000. With this installation, we now have a fully enclosed brine handling system, thereby eliminating discharge of salt water to the St. Clair River.

Money alone is not the answer to our current pollution dilemma. In any plant, large sums can be spent on abatement facilities, and, in themselves, these devices simply become changes to the landscape, unless the operators who are to manipulate them do so with both purpose and intelligence. Purpose is an outcome of motivation and intelligence stems from education. The remainder of this paper describes steps taken at Corunna to motivate and educate our plant operating personnel towards a successful day-to-day abatement campaign.

To embark on such an undertaking, it is essential that plant management first establishes a priority - a degree of seriousness. Traditionally, the two most emphasized areas of concern in an oil refinery have been personnel safety and plant fire protection. The need for personnel safety is obvious. Fire protection embodies both safety and continuance of equipment profit earning capability. With regard to profit, you will recall that point 2 in our corporate environmental conservation policy reads as follows:

> "Considers protection of the quality of air, water,and soil, and control of light and noise level, as community obligations which are part of the cost of doing business."

In other words, in considering any venture, the payout, the earning power, the percent return on investment, however you wish to express it, must include adequate provision for conservation facilities in the same manner as funds are set aside for fire fighting equipment. With this in mind, and considering our community obligations, it was decided that our determination and vigor in selling pollution abatement to operating personnel should match that of fire protection.

With this decision, in the fall of 1969 we met with the executive of our employees' union and in appropriate depth discussed with them plant management's concern on water pollution abatement. We acknowledged the role that the Company must play in providing up-to-date and comprehensive water treatment hardware, but emphasized that hardware alone was of limited value unless the plant operators did their very best, firstly in minimizing accidental spills, and secondly in controlling and confining spills if they should occur. To indicate the seriousness with which we viewed this area of our operations, we told the executive that spill prevention and control was equivalent in our minds to a fire situation and, therefore, we intended to commence a general training program to educate our personnel in environmental conservation and the obligations that they as both employees and members of the community must assume. At the conclusion of the meeting, the union executive stated their agreement and assured us of the complete support of all hourly-paid participants.

As mentioned earlier, our overall training objective was to motivate and educate plant personnel to a higher level of awareness and involvement. In addition, since oil spills could occur at any hour of the day, we also wanted to have on shift enough trained personnel to handle and confine spills immediately in the same sense that a fire crew was always available. Consequently, we designed a two section, four hour course. The first section provided a two hour lecture on the significance and seriousness of environmental pollution in general and discussed specific contaminants arising from the day-to-day operation of an oil refinery. In the second section, the men were taken into the field and were educated in the operation of our effluent treating hardware and also our emergency confinement and recovery equipment, such as a slick bar boom and a floating portable oil skimmer. To show our people that the course was not to be viewed as a token gesture and that management was behind it 100 percent, I personally gave the two hour familiarization lecture. To establish an atmosphere that was both personal and communicative, attendance at all lectures was restricted to approximately seven or eight employees. To date, over 100 people have attended this course.

As well as the employees, we of management learned from these lectures. For example, to establish a working datum, at the outset of every lecture I would ask of each participant - "What is pollution?". To say the least, I was amazed at the number of persons who answered - "This is what industry is doing to our air and water." Amazed from the point of view that here was a goup of people who earned their living from working in industry, the wherewithal of industry, and yet felt no association or involvement with industry. I ask the question: "Whose fault is this and where should public relations really start?"

I was equally surprised at finding out that outside of oils in our effluent water, our men knew nothing or very little about other serious pollutants. These men have worked in our plant for on the average of five to ten years - yet not one of them could tell me why phenols were regarded as a major offender. To them phenols were something that the company didn't like in the effluent water and, therefore, had separate facilities to collect and dispose of them. Not one knew that phenols were an extremely effective and non selective killer of living bacteria causing excessive damage to the ecology of receiving waters. Again I ask the question - "Whose fault is this?" After discussing the chemistry of phenols and illustrating their harmful effects by quoting, as an example, carbolic acid as a disinfectant in hospitals, the men have returned to their duties with, I am sure, a greater awareness. Lately two incidents occurred that support this belief. Recently, one of our young engineers told me of asking an operator to go out into the unit and draw a special spent phenolic caustic sample from a connection not equipped with a drain funnel. To his satisfaction, from a distance he observed that the operator flushed the connection into a five gallon pail, drew the required sample, and then carried the pail over to a drain funnel connected to our enclosed spent caustic sewer system and disposed of it accordingly. In the past, I am sure that the operator would have flushed the connection to the concrete slab and then washed down the slab to our effluent water system with a utility water hose. In our laboratory, many

samples of spent caustic and phenolic waters are tested each day. That portion remaining after assay was generally poured into the sinks for disposal. In total, this represented a sizeable quantity of phenols reaching our oily water separator and ultimately to the St. Clair River. Partly on their own suggestion, testers now set such samples aside for harmless disposal. I now ask - "Do your operators know pollutants from your plant to the same general degree of seriousness as you do?"

A couple of months ago, I was talking to one of the operators of our effluent treating equipment. I casually asked how everything was going at the separators. Without any prompting on my part, he replied that things had improved a lot lately. I asked him what he meant by this and he commented that at one time if an increase in incoming oils to the separators was noticed, he would quickly call our central control room, but it seemed to take quite a while for the men on the units to correct the situation. However, now their response was almost immediate and he no longer had to keep "bugging" them to find out from where the oil was coming. This, he said, made his job a lot easier and I am certain that it results from our pollution training efforts.

As well as our operating people, we have given similar but more extensive training to our plant supervisors. At our refinery, as well as at other Shell Canada locations, we have prepared a very detailed spill contingency manual. This manual describes the necessary procedures that the supervisor must follow if an oil spill occurs on his shift. It tells him how he is to organize the confinement and clean-up crew, how each piece of equipment is to operate, where to obtain additional supplies such as dispersants and straw, and, depending on seriousness, in what order he is to call out management staff to obtain assistance from outside sources and to notify regulatory bodies. In other words, he is in charge of initial confinement and clean-up and he must be sufficiently familiar with the contents of the manual that he should seldom be in doubt as to the next logical step.

In summation, I am not saying that we have developed a perfect system at our plant. I know that regardless of how much money we spend or how well we train our people, some arrangement of circumstances will test our capabilities and foresight. However, we must make a start; and involvement attitude in the minds of both management and plant personnel coupled with motivation and education, will dictate our future success. It is our hope that should a test situation develop, that it will not be a result of ignorance and carelessness, that it will be something beyond an attitude factor, and that action towards confinement and clean-up by our plant personnel will be both immediate and effective.

DONALD M. ROBINSON

"FROM PROBLEM TO SOLUTION WITH ABS POLYMER WASTEWATER"

BY

DONALD M. ROBINSON
POLLUTION CONTROL SPECIALIST
DEVELOPMENT DIVISION
BORG-WARNER CHEMICALS AND PLASTICS GROUP
PARKERSBURG, WEST VIRGINIA, U. S. A.

DENNIS R. BOLTEN
WASTE CONTROL ENGINEER
MARBON DIVISION
BORG-WARNER CHEMICALS AND PLASTICS GROUP
WASHINGTON, WEST VIRGINIA, U. S. A.

FOREWORD

Before going into the technical aspects of this paper, a brief discussion of underlying philosophy appears to be in order. While most of us recognize the importance of the following points, the condition of our environment today make them even more significant.

Basic to the solution of any environmental pollution problem is attitude. Recognition of need and acceptance of responsibility must exist before any positive steps toward solution can be made. In any industry this acceptance must be followed by commitment to the principle of maintaining a clean environment.

The expense of installing and operating pollution control equipment and facilities must be accepted as a normal operating cost.

Communication is another essential. Industrial management is responsible for profit---and pollution control measures directly affect the traditional concept of profit. Therefore, management must be continuously informed so that it can direct pollution control activities which will produce acceptable results at the lowest possible cost.

Another important feature of pollution control today is dedication to its principles. All process innovation and new product manufacture must be measured against the yardstick of the pollutants produced and their effects on the environment. Modified practices and the inclusion of recycling and recovery equipment may be required to minimize unwanted effects. Modern management will require such steps before process changes are allowed or new product manufacture is started.

HISTORY OF ABS RESIN DEVELOPMENT

The Acrylonitrile - Butadiene - Styrene (ABS) thermoplastic resins were first introduced in 1948. These plastic materials resulted from intensive research conducted on the manufacture of synthetic rubbers during and after World War II. (1)

Recognizing that the unique properties of ABS resins yielded a product with wide potential applications the Borg-Warner Corporation began pilot plant and semi-works operations in Gary, Indiana in the early fifties. When manufacturing processes had been defined and market potential had been evaluated, a full scale manufacturing facility was constructed in Washington, W.Va. The Marbon Chemical Division of Borg-Warner Corporation began limited production of CYCOLAC, Brand ABS, at this location late in the fifties. Since that time, manufacturing plants have been built in Illinois, Ontario, the Netherlands, Scotland, Australia, and Japan. Raw material or partial manufacturing facilities have also been constructed in Texas, Louisiana, and California.

ABS resins are used extensively today in the manufacture of pipe and the fabrication of telephones, appliance housings, safety helmets, and interior and exterior automotive parts. The resins are being used to manufacture experimental car bodies in the U.S.; and in Europe, the Mehari, a jeep-like vehicle produced by Citroen, has an all CYCOLAC resin body. Canoes, sailboats, campers, snowmobile bodies and All-Terrain Vehicle bodies made with ABS are proving the worth of these resins in the recreational field.

WASTEWATER POLLUTION CONTROL STATUS

All Marbon Division ABS manufacturing plants had been built with treatment facilities acceptable to water pollution control agencies at the time of construction. Expansion programs and new plant development, however, coincided in time with the rising concern about water pollution. While pH control and solids removal had been practiced at each plant, the Division now recognized the need for additional treatment.

As the major ABS manufacturer, Marbon was in the unique position of having to pioneer the investigations needed to determine how requirements for secondary treatment could be met. It was clearly evident that a closely coordinated program must be organized to accomplish the objective of secondary treatment design in the shortest possible time. A plan to meet this objective was put into effect in the fall of 1967.

Discussions were held with the Ontario Water Resources Commission (OWRC) during which the problems of defining and installing secondary treatment at the Cobourg, Ontario, plant were fully described. It was concluded jointly that the OWRC would be kept fully informed, through periodic reports and discussion, of all progress during the investigation, process design and construction phases of secondary treatment facilities. As a result of this exchange of information, the Commission was able to make helpful suggestions and the Marbon Division was assisted in preparing a design which would meet the requirements of the Province of Ontario.

PLAN OF ACTION

The Marbon Division was faced with several problems which required solution before treatment investigations could be started. Two of the plants needing secondary treatment are located in the U. S. and the third is in Cobourg, Ontario. Investigations could not be done independently at each site. This problem was solved by deciding to centralize the research work at the West Virginia plant location. Since the same products are manufactured under the same conditions at each site, it was reasoned that data obtained at one location could be translated into system design for the other locations.

Another problem was the lack of trained personnel and proper laboratory facilities at the West Virginia plant. All wastewater monitoring had formerly been done by contract with outside agents. The personnel shortage was solved by assigning the co-authors of this paper to work with an analytical chemist, Mr. Carl E. Wilson, of the Quality Control Department in November 1967. Mr. Wilson was assigned full time to wastewater testing and investigation until design data had been obtained.

To meet the need for adequate laboratory facilities, a small laboratory building was designed and all necessary equipment was ordered. While waiting for the laboratory to be completed, the investigators prepared a plan of action and began testing of the raw wastewater.

The plan which evolved had four basic objectives:

1. Physical and chemical characterization of the wastewater.

2. Determination of bio-degradability

(and, if positive)

3. Accumulation of data from bench scale and pilot plant studies to supply information needed for process design of a secondary system.

4. Preparation of a process design for a full scale secondary wastewater treatment system.

The investigative work was started in November, 1967 and the first three objectives had been met by mid-October, 1968.

WASTEWATER CHARACTERIZATION

This part of the investigation was started with the collection of composite samples from the total mixed waste stream and from the individual manufacturing units contributing to it. Flow rates were determined at the time of sample collection. A basic test battery was performed on all samples - : pH, free and total acidity, chlorides, sulfates, suspended, dissolved, and total solids content, COD and BOD.

Information collected during this phase was used to locate the sources of major pollution loads. An estimate of magnitude from the various sources for the Cobourg plant is shown in Table A. A typical characterization for the total combined waste stream is shown in Table B.

Some elementary attempts were made at determining bio-degradability while waiting for the laboratory to be completed. These trials were conducted using a standard home type aquarium tank with a positive displacement aquarium air pump connected to standard air stones. Effluent from the company's septic tank system was used to obtain a bacterial population which might possibly be acclimated to ABS wastewater. (All personnel involved in this work had been immunized earlier against typhoid, paratyphoid, tetanus and smallpox.)

Fifteen liters of septic tank effluent were placed in the tank and aerated for three days after which a batch feeding program was started. Ten percent of the waste volume was removed from the aeration tank each day and replaced with an equal volume of septic tank waste. This procedure continued for about one week until the cloudiness of the aerated waste indicated that bacterial growth was occurring. The daily feeding was then modified by using a mixture of 95% septic waste and 5% ABS wastewater. The proporation of ABS waste was gradually increased over a period of one month until the daily feeding consisted totally of ABS wastewater.

Some COD determinations were made on the raw and treated wastewater but results were quite erratic. It became apparent that the batch feeding was sometimes acting as a shock load because constituent concentrations vary with the product grades being manufactured.

The aeration tank was used to obtain seed for making BOD determinations, but these results were also erratic. One feature was quite noticeable, however. The results obtained were consistently higher than those reported by consultant groups. This fact was obviously due to the difference between using acclimated and non-acclimated seed, a phenomenon which has been reported many times (2).

BIO-DEGRADATION STUDY

The new wastewater laboratory was occupied in April 1968 and an organized study to verify bio-degradability was started about May 1.

A biological sludge was acclimated as described previously. When the Mixed Liquor Suspended Solids, (MLSS) approached 1000 mg/l, the bio-mass was transferred to a continuously fed ten liter, plexiglass bench scale treatment unit (3). Testing for BOD, COD, and MLSS was started several days after continuous waste feed was begun. Results over a three week testing period provided positive evidence that the wastewater was biologically degradable.

Table C show pertinent degradability data.

DESIGN DATA COLLECTION

Additional bench units were started up as soon as the fact of biological treatability was established. Three and four of the units were operated simultaneously so that the effect of various retention times and feed rates could be studied. Several of the consitituent streams making up the combined wastewater were also studied independently to determine the feasibility of smaller treatment systems operating at the source.

When the MLSS concentration in the additional treatment units reached a concentration of 2500 mg/l, a daily testing program was started. The test battery included determinations of BOD and COD on the influent and effluent, temperature, dissolved oxygen level, oxygen uptake rate, Mixed Liquor Suspended Solids, Mixed Liquor Volatile Suspended Solids (MLVSS) and Settleable Solids on the aeration tanks. The MLSS was adjusted as needed to maintain a solids concentration of 2500-3000 mg/l (4).

Two of the bench units were operated in parallel at six hours retention time. Two others were used to study longer retention times and to investigate treatment of individual waste streams.

Table D lists part of the basic data which was obtained from the bench units. This information was used later to determine some of the coefficient values needed in oxygen requirement and sludge production equations.

A side study performed while basic oxygen requirement data was being collected, was a determination of the relationship between MLSS and MLVSS. This was also correlated with Settleable Solids testing to obtain information on the Sludge Volume Index (5). It was found that the ratio of MLVSS: MLSS was 0.844 and that the Sludge Volume Index was 93.6 ml/gram sludge. Both of these factors proved valuable in making rapid estimates of sludge concentrations, both in the bench units and the pilot plant.

A pilot plant was operated to obtain verification of the bench unit data which had been collected. The waste stream was neutralized and process solids removed before entry into an aeration tank. Sludge solids were trapped in a settling chamber and pumped back for mixing with the influent stream. The aeration tank had a capacity of 10,000 U. S. gallons (8330 Imperial gallons) and aeration was done using a Mixing Equipment Company model LAT-41 3 HP, platform mounted aerator. This unit has an oxygen transfer rating of 4.0 lb/HP/HR. in clean water at 20°C. Retention time during this study was maintained at about 48 hours since this represented the approximate capacity of the ponds which would be used at the Marbon Division plants.

A summary of data collected from the pilot plant study is shown in Table E.

TREATMENT SYSTEM DESIGN

It was decided that an extended aeration system would be the most applicable to OWRC requirements and physical characteristics of the manufacturing plant at Cobourg. Such a system could be upgraded in the future to conventional activated sludge as it became necessary to process larger wastewater volumes.

Requirements for an extended aeration system were determined using the data collected during bench unit and pilot plant operation. Three basic design equations were used for system definition. (3, 6, 7) These were as follows — :

For oxygen requirements:

$$O_2 = a' Sr + b' Xv$$

For sludge production:

$$X = a\ Sr$$

For excess sludge:

$$dX = a\ Sr - bf\ (Xv) - \text{Effluent loss}$$

The term definitions, along with pertinent coefficient values, are - :

a = lbs sludge produced/lb BOD removed = 0.55
a' = lbs oxygen required/lb BOD removed = 0.41
Sr = BOD removed, mg/l
b = fraction of sludge undergoing digestion = 0.1
b' = lbs oxygen required/lb sludge being oxidized = 0.13
f = fraction of sludge which is degradable = 0.75
X = sludge concentration maintained in system, mg/l
Xv = fraction of MLSS which is MLVSS = 0.84

The system to be designed had the following characteristics and conditions:

1. Hydraulic loading = 350 U.S. GPM (292 Imperial gpm)

2. Aeration Basin Volume = 1.01 Million U. S. gal. (842,000 Imperial gallons)

3. BOD removal

   So = BOD_5, Influent = 700 mg/l

   Se = BOD_5, Effluent = 15 mg/l

   Sr = BOD_5, Removed = 685 mg/l

4. Sludge recovery and wastage

Sludge concentration in aeration basin	= 3000 mg/l
Overflow rate, clarifier	= 700 gpd/ft^2
Retention time	= 2 hours
Underflow sludge concentration	= 12,000 mg/l
Sludge loss in effluent	= 15 mg/l

The influent BOD_5 value of 700 mg/l represents the high value which occurs ten percent of the time. It was used in the calculations as a safety factor to assure an adequate oxygen supply under all conditions of organic loading. In the estimation of aeration horsepower required a value of 2.0 lb oxygen/hour/ nameplate horsepower was used. This conservative figure is intended to compensate for an Alpha factor which varies with the particular grade of ABS resin being manufactured.

Using the equations, coefficients, data, and conditions given previously, the following design information was obtained:

Oxygen required = 3,940 lb/day

Aerator horsepower required = 82

Excess sludge produced = 205 lb/day

Sludge recycle ratio - 0.33

Sludge recycle volume = 115 U.S. gpm (96 Imperial gpm)

Organic loading = 0.11 lb BOD/lb MLSS

Aerated retention time, including recycle = 36.2 hours.

A full size wastewater treatment system was designed utilizing information detailed in this paper in combination with the physical characteristics of the existing facilities at the Cobourg plant. The first phase of the system, a surface stabilization type operation, was completed and started up in April, 1970. Installation of a secondary clarifier and sludge recirculation equipment will be done this summer to complete the extended aeration system.

Projected values for the raw and treated wastewater from the final system are shown in Table F.

SUPPLEMENTAL STUDIES

As has been mentioned, close liaiaon has been maintained with the OWRC since the original research work was organized. This contact has resulted in additional investigations which have benefited the Marbon Division and have assured development of a treatment system which will accomplish the end required.

During the original bench scale and pilot plant work, nutrient levels of the raw wastewater were determined sporadically. Manpower and time limitations prevented more thorough investigation. Visual observations of growth response and MLSS testing had indicated no lack of nutrient factors and the occasional tests done showed adequate levels of nitrogen and phosphorus.

Personnel of the OWRC Division of Industrial Wastes pointed out that an efficiently functioning system depended to a large extent on the presence of adequate amounts of nitrogen and phosphorus. It was suggested that the system design should include provisions for adding these materials if they were needed. Consequently, a detailed investigation of the raw wastewater was performed over a two month period with daily determinations of Ammonia, Organic, and Total Nitrogen using the Kjeldahl procedures. The determination of total phosphate was performed on the raw wastewater daily for a one month period. A summary of the results of nitrogen and phosphorus testing is given below.

KJELDAHL NITROGEN RESULTS

(mg/l)

	Ammonia Nitrogen			Organic Nitrogen			Total Nitrogen		
	MIN.	MAX.	AVG.	MIN.	MAX.	AVG.	MIN.	MAX.	AVG.
Raw Waste Water	0	22.2	6.3	12.5	67.5	35.9	14.9	63.9	42.0

PHOSPHORUS RESULTS

(mg/l)

	As Total Phosphate			As Total Phosphorus		
	MIN.	MAX.	AVG.	MIN.	MAX.	AVG.
Raw Waste Water	12.0	64.5	30.9	2.3	12.3	5.9

Using the commonly accepted ratios of BOD:N:P = 100:4:1, it can be seen that quantities of nitrogen and phosphorus are adequate for the BOD range of 400-600 mg/l which occurs about ninety percent of the time.

Another question raised by the Division of Industrial Wastes concerned the fate of acrylonitrile, a component of the wastewater, and one of the raw materials used in the manufacturing process. A special investigation was arranged using two of the

biological bench units in parallel. Acrylonitrile determinations were made using a gas chromatograph for the testing of influent and effluent samples. Retention time was adjusted to approximately 24 hours in each unit. After the first two test series, the procedure was refined to have a sensitivity of one milligram/liter.

Data from this study are shown below.

ACRYLONITRILE

(mg/l)

Raw Wastewater	Effluent Wastewater Unit #1	Effluent Wastewater Unit #2
108	Less than 10	Less than 10
370	350	Less than 10
68	Less than 1.0	Less than 1.0
32	Less than 1.0	Less than 1.0
30	Less than 1.0	Less than 1.0
20	Less than 1.0	Less than 1.0
130	Less than 1.0	Less than 1.0
120	Less than 1.0	Less than 1.0
120	Less than 1.0	Less than 1.0
130	Less than 1.0	Less than 1.0

The reading of 350 mg/l in Unit #1 in the second test series illustrates an interesting point. The air valve to this aeration tank failed, resulting in high air flow with the entire bio-mass being floated out of the unit into the effluent receptacle. Comparative results from the two units indicate that acrylonitrile reduction, then, is due to biological action rather than air-stripping. This is in agreement with previously published information (8, 9,).

One further program has been carried out. A training session was organized and conducted for two of the employees of the Cobourg plant. The purpose was to assure that proper monitoring and operation of the wastewater treatment system would take place.

Training was conducted at the Marbon Division's plant in West Virginia and was divided into two phases. During the initial session, the men received intensive orientation on the need for, and importance of, waste water treatment, on the theory of biological systems, on the regulations of the Province of Ontario and on the basic techniques and procedures for performing wastewater tests. Following this period the men obtained and arranged all the equipment and apparatus needed to set up a basic wastewater testing laboratory at the Cobourg plant. After obtaining some on-site experience with the new treatment works, they returned for a second training session in which procedure and technique were reviewed and some advanced testing methods were taught. It is believed that this attention to the operating personnel will be of much help in attaining the most efficient operation of the new works.

CONCLUSION

It has been the purpose of this paper to describe the means by which an industry found an answer to a wastewater pollution control problem. It has been the further objective to bring out several points not often considered in wastewater treatment:

1. The solution to an undefined wastewater treatment problem depends as much on commitment and determination as it does on technology.

2. Close cooperation with regulatory agencies can result in benefits to both parties.

3. The physical treatment plant is only part of the story of successful control. Proper attention must be given to the philosophy of environmental responsibility and to the often unrecognized importance of operating personnel.

TABLE A

POLLUTION LOAD SOURCES AND MAGNITUDES

	% Hydraulic	% Total Solids	% Organic	% Inorganic
Resin Polymerization Area	80	85	90	95
Compounding Area	10	5	0	0
Miscellaneous (labs, utility area, clean-ups, offices)	10	10	10	5

TABLE B

TYPICAL CHARACTERISTICS OF UNTREATED, COMBINED WASTE STREAM

pH	1.9
Total Solids, mg/l	1810
Dissolved Solids, mg/l	1700
Suspended Solids, mg/l	110
Total Acidity, mg/l as $CaCO_3$	650
Free Acidity, mg/l as $CaCO_3$	550
BOD_5, mg/l	700 (0% Occurrence) 500 (0% Occurrence)
COD, mg/l	800
Chlorides, mg/l	300
Sulfates, mg/l	750

TABLE C

FACTORS INDICATING POSITIVE DEGRADABILITY

INFLUENT		EFFLUENT		% REDUCTION		AERATION TANK
BOD mg/l	COD mg/l	BOD mg/l	COD mg/l	BOD	COD	MLSS mg/l
665	940	210	235	68.5	75.0	1000
645	750	145	120	77.5	84.0	1215
885	845	85	235	90.4	72.2	1270
550	505	55	40	90.0	92.1	1415
710	785	25	120	96.5	84.7	4960
875	960	35	75	90.0	92.3	3830

NOTE: MLSS allowed to develop freely, without adjustment.

TABLE D

BOD AND COD REDUCTION DETERMINED

IN BENCH UNITS

INFLUENT		EFFLUENT		PERCENT REDUCTION	
BOD mg/l	COD mg/l	BOD mg/l	COD mg/l	BOD	COD
825	740	35	230	95	69
800	1285	25	620	97	52
750	920	20	270	97	71
600	690	10	175	98	75
640	685	40	115	94	84
690	755	10	340	98	55
860	840	110	110	87	87
720	725	5	110	99	85
525	780	5	315	99	60
525	660	5	95	99	86
660	820	15	155	98	81
250	805	65	155	74	93
250	1035	65	365	74	65
690	670	65	215	91	68
560	595	150	0	73	100
370	645	80	160	78	76
600	745	30	390	95	47
420	590	10	350	97	40
490	665	15	195	97	71
285	735	10	270	97	63
500	690	10	190	98	72
505	715	10	190	98	74
480	715	15	115	97	84

TABLE E

TREATABILITY DATA FROM PILOT PLANT OPERATION

	INFLUENT		EFFLUENT		R DUCTION %	
	BOD mg/l AVG.	COD mg/l AVG.	BOD mg/l AVG.	COD mg/l AVG.	BOD	COD
First Test Period	445	895	40	145	91	84
Second Test Period	425	780	15	125	97	86

TABLE F

RAW VS. TREATED WASTEWATER

	Raw Wastewater	Treated Wastewater
Suspended Solids, mg/l	110	15
Dissolved Solids, mg/l	1700	2000
Total Solids mg/l	1810	2015
Total Acidity, mg/l as $CaCO_3$	650	30
Free Acidity, mg/l as $CaCO_3$	550	0
BOD_5, mg/l	700	15
COD, mg/l	800	90

REFERENCES

1. W. Mayo Smith, Editor, Manufacture of Plastics, Vol. 1, The Reinhold Corp., New York, N. Y., 1964

2. Ross E. McKinney, Microbiology for Sanitary Engineers, McGraw Hill Book Co., Inc., New York, N. Y., 1962 p 175

3. W. W. Eckenfelder, Editor, Manual of Treatment Processes, Vol.I., Environmental Science Service Corp., Stamford, Conn., 1968

4. Seminar, U. of Waterloo, Water Pollution Control In The Chemical Industry, sponsored by the Manufacturing Chemists Association and the U. of Texas, 1968

5. Standard Methods for the Examination of Water and Wastewater, American Public Health Assoc., 1790 Broadway New York, N. Y. 10019, 1965

6. W. W. Eckenfelder, Industrial Water Pollution Control, McGraw Hill Book Co., New York, N. Y., 1966

7. Linvil G. Rich, Unit Processes of Sanitary Engineering, John Wiley and Sons, New York, N. Y. 1963

8. Ronald D. Sadow, "Acrylonitrile and Zinc Wastes Treatment Parts I and II", Industrial Water and Wastes, March - April, 1961 and May - June, 1961

9. Ludzack, F. J. Schaffer, R. B., Bloomhuff, R.N. "Experimental Treatment of Organic Cyanides by Conventional Processes," J. Water Pollution Control Federation, Vol. 33, No. 5, p 492, May, 1961

SESSION CHAIRMAN,
MR. B. B. BARNES,
INDUSTRIAL WASTES SECTION,
NEW BRUNSWICK WATER AUTHORITY,
FREDERICTON, N. B.

"TREATMENT OF DISTILLERY WASTES - A CASE HISTORY"

BY

F. H. BELLSTEDT, B.Sc., ASSISTANT DISTILLERY MANAGER

R. K. NETHERCOTT, CHEMICAL TECHNOLOGIST

CORBY DISTILLERIES LIMITED
CORBYVILLE, ONTARIO

F. H. BELLSTEDT, B.Sc.

The plant of Corby Distilleries Limited is situated on the Moira River, some four miles upstream from the City of Belleville and the Bay of Quinte. The distillery has been operated in this locality since 1859, producing beverage and industrial alcohol. The entire water supply for the plant is drawn from the river, and has to be purified to various extents depending on usage. Except for our plant, this is an otherwise rural area and there is, therefore, no municipal sewage system for either sanitary or industrial wastes.

The distillery complex extends over an area of 10 acres and has been equipped with a complete system of sanitary sewers, some of which discharge into septic tanks and tile beds, and the rest into a small sewage lagoon. Industrial wastes have always been returned into the river, after the bulk of the potential pollution load had been removed from them by our by-products recovery plant.

The flow of the Moira River is subject to severe seasonal fluctuations from a recorded high of 3710 cubic feet per second to a low of 15 cfs during a particularly dry summer. At times of low flow, water temperatures rise rapidly and reach 82 to 85° F during the summer months.

Fermenting and distilling operations require adequate supplies of cooling water no warmer than 65° F and the high temperatures in the river therefore forced us to interrupt production annually from the middle of June until the second half of September. Since 1965, however, increased production requirements prompted us to extend production to a duration of 48 to 49 weeks per year by the installation of a water pre-chilling unit. In 1966, capacity was further increased by the installation of new stills and larger by-products facilities, all of which increased the potential pollution load on the Moira River. At this stage, therefore, pollution abatement beyond the scope of full by-products recovery became imperative.

To produce grain alcohol or whisky, corn and/or rye is cooked under pressure, cooled, saccharified by the addition of barley malt, cooled further, and then fermented by the addition of pure yeast to form a heavy slurry containing 5 - 8% of alcohol, which is commonly referred to as beer.

This beer is then passed through a continuous distillation column to remove a volatile fraction containing all the alcohol and various congeneric organic substances plus some water. This fraction is subsequently rectified to a greater or lesser extent to achieve the exact degree of purity and flavour desired by the distiller. This rectification requires high reflux-rates in the various columns and, therefore, calls for large quantities of cooling water.

The liquid residue of the first distillation, referred to as stillage, contains all the ingredients of the grain except the carbohydrates, and in most North American distilleries all or part of these nutrients are recovered for sale as animal feed.

In our plant, too, we have a complete by-products division where the stillage is screened and then concentrated in a triple-effect vacuum-evaporator. The resulting heavy syrup and the screenings are finally combined and dried. This by-product recovery, incidentally, removes between 98 and 99% of the potential pollution load of a grain distillery.

For the processing of some 160 tons of grain per day, six days per week, our plant requires between 1 - 2000 gallons per minute of water, and creates waste flows summarized in Table I.

Most of the data in this table were accumulated by Messrs. Hyon Limited, who carried out a complete survey of waste flows and preliminary treatability studies in the spring of 1967. Where necessary, their figures were extended by further measurements and analyses subsequently carried out by our own staff.

Evaluation of these results and analyses of sewer flows show an average BOD loading of 1900 pounds per day going into

the river under normal operating conditions; and suggested that considerably higher values would be found if spills or leaks occurred in any part of the distillery.

Discussion of these findings with O.W.R.C. staff established a two-fold target of approximately 90% reduction of COD/BOD, and a residual level of 4 parts per million dissolved oxygen to be maintained in the river at all times.

It was immediately clear that not all of our waste flows would require purification and that a complete separation of polluted and clean flows would be required. Flows marked (X) on Table I would obviously need treatment, and among them the effluent from the barometric condensers of our evaporators contributed an excessively large volume. We decided, therefore, to base our approach on the premise that this volume would have to be significantly reduced by continuously recycling and recooling the water going to these condensers, and then taking off a constant fraction of this flow for treatment and discharge. The organic matter should then, we considered, be concentrated to a COD value similar to that of the condensate from our evaporators. We, therefore, decided to conduct treatability studies on this condensate, to which would be added grain solids to duplicate the calculated load derived from plant wash-ups, etc.

At this stage, we obtained the services of Messrs. H. G. Acres Limited as consultants and they in turn engaged Messrs. L. S. Love & Associates to conduct the necessary preliminary investigations.

The results of their biodegradability tests on the above mixture of wastes established that

(a) Biological breakdown of our wastes was practical by an activated sludge process.

(b) Settling characteristics of the resulting sludge would be poor and further chemical clarification might be needed.

(c) Copper content of the wastes (originating from the copper heating tubes of our evaporators) presented problems.

(d) Low pH of the wastes (3.5 - 4.0) would require adjustment prior to any treatment.

(e) Average BOD of the waste was found to be 600 parts per million, COD 900 parts per million, Nitrogen 11 ppm, P 2.7 ppm and addition of nutrient salts would, therefore, probably be necessary.

(f) Aerobic digestion of surplus sludge should be investigated.

To obtain more quantitative data and to evaluate long-term performance of the suggested system, we then set up one, and later, a second laboratory digester. These were 5-gallon, air agitated tanks with clarifying sections, and were seeded with sludge from a nearby activated sludge plant. To this system we fed our mixture of wastes in varying rates and continued these experiments over approximately six months.

Table II shows a typical cross-section of the results obtained.

From these tests, we concluded that

(a) Without additional nutrients, no more than 22% COD reduction could be obtained.

(b) Addition of 50 ppm N and 10 ppm P to the feed, plus 1 ppm each of Co and Mn, increased COD removal to 90% and better. Further increase to 75 ppm N seemed to have no significant effect.

(c) Copper content of the feed had varied between 2 and 12 ppm, averaging around 3 - 4 ppm. Copper was retained by the sludge until it reached 180 - 240 ppm, at which time the sludge would turn black, with some green scum and then, very suddenly, pH would drop from 7.5 or 8.0 to below 5, and the system would foam violently, and could not be revived.

(d) Copper content could be removed by electrolytic exchange for iron, or by preliminary precipitation with lime. Copper-free wastes could be digested for long periods. Both techniques caused other problems, however, by producing large quantities of sludge.

(e) Failure to feed system constantly would cause a drop in pH and death of organisms.

(f) To obtain good COD reduction, MLSS values of 3 - 5,000 ppm were needed.

(g) There were some indications that, with enough lime present, we might be able to digest the wastes even without preliminary removal of copper.

While these results were definitely encouraging, we felt that they were not sufficient for plant design because all the work had been done on grab samples of wastes and also because the withdrawal of samples from the system for analysis did, in effect, amount to a continuous desludging.

We, therefore, decided to set up a pilot plant to clear up the remaining questions: - Extent of copper buildup from wastes drawn directly from the sewers, effects of sudden

overload or underloads, oxygen requirements, rate of sludge buildup, methods of disposal of expected surplus sludge and ways of keeping the system active during a 3 - 4 week plant shutdown.

Our pilot plant was designed for a through-put of 1 - 2% of our expected total waste flow, which was drawn from a sump to which the greater part of our polluted wastes had been diverted. From here a continuous sample was pumped to a balancing tank in which pH was maintained at between 7 and 8 by a controlled feed of lime slurry. From here, wastes were pumped at varying rates into an open 2,530 gallon tank equipped with a Simcar aerator. A 280 gallon compartment functioned as settling tank from which sludge was continuously recycled into the aerator. Clear effluent could be withdrawn over an adjustable weir, and was accumulated in a third tank to allow for true sampling of 24 hour output.

Throughout the five months' operation of this unit, we were plagued with operational difficulties due to the reluctance of small-output-pumps to handle continuously liquids containing varying amounts of suspended matter. Nevertheless, interesting results were obtained,as illustrated by Table III:

The results established that on wastes with a COD value of 1,000 ppm we could obtain 90% or better purification in 17 - 18 hours retention. Suspended solids would build up rapidly to 5,000 ppm and would then tend to carry over into the effluent due to poor settling characteristics.

Settling could be improved by adding 0.1% stillage to the total feed.

Copper content of the feed varied around 1 - 2 ppm, but this did not build up beyond 25 ppm in the aerator as long as sufficient lime was present.

The plant showed excellent recovery from shock loads, and could also be kept going for weeks by feeding stillage stored for this purpose.

Surplus sludge was continuously generated and we endeavoured to break this down further by aerobic and anaerobic digestion, but no significant purification could be achieved.

On the basis of the sum total of information then to hand, including settling curves, nutrient requirements, sludge production, etc. we could now instruct our consultants to proceed with the design of our treatment plant, which finally included the following:-

1) A cooling tower for all clean, hot wastes. This was designed to cool up to 1,170 Imperial Gallons per minute from 155 to 85° F and would assure an adequate DO level in

the river.

2) A cooling and recycling system for all hot polluted wastes, comprising a pumping station and a cooling tower sized to cool 700 I.G.P.M. from 155 to 85° F. This tower and all equipment were to be built of acid-resisting material. In view of the expected high organic content of wastes recycled over this tower, it was designed with double spacing of fill to enable us to cope with the likely buildup of slime.

3) All contaminated wastes, including the blow-down from the tower referred to in item 2, plant washings, still bottoms and boiler room wastes were to be accumulated in a sump in a second pumping station. This sump was equipped with an agitator, pH controlled lime-feed and nutrient-feed pumps.

4) Mixed wastes were to be pumped to an aerator, designed for 200,000 Imp. Gals. per day, 24 hour retention, equipped with two mechanical aerators to transfer 83 pounds oxygen per hour.

5) A rectangular clarifier with conveyor type sludge collector; 2.1 hour retention and a 200% sludge return rate.

6) Clarifier to discharge into a 1.02 acre lagoon, which at 4 feet depth would give us 5 day retention for final settling.

The entire system was installed by October 1969, and has been operating successfully since then.

After seeding with active sewage sludge, MLSS built up to 3,600 ppm in 3 weeks, and COD removal reached 84% in the same time.

Operating results shown in Table IV.

The results shown were all based on grab samples and are, therefore, not necessarily statistically valid. During abnormal operating conditions, more samples would be taken than usual, and the values shown would, therefore, tend to reflect such abnormal conditions. Nevertheless, the results do lead us to the following conclusions and comments:

Operation of the entire unit was smooth and no serious problems developed. While the quality of the effluent seems still to be indifferent in view of the COD values which average between 30 and 60 ppm, analyses carried out by the O.W.R.C. showed a COD to BOD ratio of approximately 8:1 which would indicate that our treated wastes are discharged at 10 ppm BOD or less. During operation it was found that pH adjustment of the feed was unnecessary as the lime content of our boiler room wastes was retained in the mixing sump and the aerator sufficiently long to balance out pH fluctuations completely, and no additional lime

was therefore added at any stage. Calcium content of the feed averages 500 ppm, while the aerator tank shows 1,025 ppm.

Originally nitrogen, phosphate and potash were added to maintain nutrient balance. Dosage of these materials was gradually reduced and at present, addition of 11 ppm of nitrogen (as ammonium chloride) and 2 ppm of potash (as potassium chloride) seems to be sufficient to maintain the system active. The aerator shows 490 ppm N and 40 ppm P. Copper content never exceeded 40 ppm and created no problems. After three months' operation, MLSS had reached 8,000 ppm with poorly settling sludge. From this time on, sludge carried over into the lagoon intermittently, but normally did not influence the quality of the effluent from the lagoon.

On two occasions during February and March failures of equipment caused considerable quantities of grain to be discharged into the treatment plant, resulting in serious overloading. In both cases, the plant recovered within 24 hours, the surplus organic material being retained in the lagoon. Effluent quality from the lagoon in each case deteriorated slightly for one or two days only. Early April, surplus sludge from the aerator was discharged to the lagoon and the system is now functioning well at a MLSS level of 4,000 ppm in the aerator. At present, the lagoon is stable, showing heavy algae growth and a large variety of other plant and animal life. On the bottom of the lagoon there is a heavy layer of anaerobic sludge, especially around the inlet pipe. We intend to dry and then remove this sludge during the annual summer shutdown.

Summary:-

Before going into the construction of a full-sized treatment plant, we conducted extensive preliminary investigations which high-lighted most of the problems which we could expect later on. The investigations provided valuable design information although it is apparent in retrospect that larger scale units operating on comparable wastes showed far greater resilience to shock loads and other abnormal conditions than either laboratory or pilot scale digesters.

An important benefit obtained from the preliminary research work was the experience it provided for in-plant training of staff who not only learned the various analytical techniques but also developed considerable skill in diagnosis of trouble and a knack for picking the right corrective action in an emergency situation.

The first six months' operation of our treatment plant has demonstrated that a suitably designed activated sludge system can stabilize distillery wastes completely, and show remarkable resilience under conditions of overload.

Grateful acknowledgement is made of the invaluable help of the technical staff of the O.W.R.C. and of our consultants in the investigations as well as the planning and completion of our waste treatment plant.

TABLE I - SURVEY OF WASTE FLOWS

DESCRIPTION	FLOW/MIN.	FLOW/DAY	COD (ppm)	TEMP.	REMARKS	
Cooker Barom. Condenser	325 I.G.	175,000 I.G.	30	Ave. 125°F	COD mainly due to carry-over of volatiles	
Mash Cooling	140-280	2-400,000	-	100-160°F	Partly recycled into Cooker Barom. Condenser	
Fermenter Washing	80	25- 30,000	0-500	190°F		*
Fermenter Cooling	21- 42	30- 60,000	-	65- 85°F		
Rectifier Cooling	400-660	550-900,000	-	Ave. 150°F	Partly re-used for Cooking, Boiler-feed and Fermenter Washing	
Evaporator Condensates	60- 80	70- 85,000	900-1,300	160-180°F	COD mainly due to steam-distilled fatty acids plus some particulate carry-over	*
Evaporator Barometric Condensers	300-600	400-800,000	90-150	135-140°F	COD mainly due to steam-distilled fatty acids plus some particulate carry-over	*
Rectifier Bottoms	1-5	Ave. 7,200	200-14,000	205°F	COD due to high boiling impurities eliminated during rectification of spirits	*
Gin Still Residues	-	400	10-12,000	200°F	COD due to soluble organic material extracted from botanicals used in gin production	*
Floor Washings & Surface Drainage	var.	var.	contaminated	-		*
By-products Plant Cleanup	var.	var.	estim. at 600 lbs/week	-		*
Boiler Blowdown	9	13,000	255	210°F		*
Hot Lime Sedimentation Tank	23	6,500	1,000	200°F	Contains large amounts of lime in suspension	*

TABLE II - LABORATORY DIGESTERS FOR DISTILLERY WASTES

DATE	RETENTION	COD (ppm) FEED	COD (ppm) EFFLUENT	REDUCTION	pH FEED	pH AERATOR	CHEMICALS ADDED N ppm	CHEMICALS ADDED P ppm	CHEMICALS ADDED Ca(OH)	CHEMICALS ADDED Na OH	REMARKS
Oct. 2	24 hours	900	900	0	6.5	5.0	-	-	-	X	
Oct.10	24 "	1,020	850	20%	6.3	6.3	-	-	-	X	'ailed Oct.13th - 'ludge 200 ppm Cu.
Oct.16	24 "	940	740	21%	6.5	6.5	-	10	-	X	
Oct.23	16 "	940	850	10%	6.7	6.7	-	10	-	X	
Oct.26	16 "	1,050	555	47%	7.6	7.4	45	10	-	X	
Nov. 8	16 "	1,050	410	61%	7.2	7.2	50	10	-	X	
Nov.20	16 "	1,250	270	78%	7.3	7.3	50	10	-	X	'ailed Nov.20th - 'ludge 220 ppm Cu.
Nov.30	16 "	940	108	88%	7.5	7.5	50	10	-	X	'opper removed with 'ron from this date on
Dec. 6	16 "	920	44	95%	8.0	7.5	50	10	X		'ime added
Dec.13	16 "	1,330	76	94%	8.0	7.5	75	10	X		
Dec.21	16 "	1,030	72	93%	8.0	7.5	75	10	X		
Dec.29	16 "	940	28	97%	8.0	7.5	75	10	X		
Jan. 2	16 "	900	50	94%	8.0	5.7	75	10	X		'eed interrupted 'ec.31st-pH dropped - 'ailed Jan.3rd
Feb. 7	16 "	1,090	112	90%	8.0	7.4	75	10	X		
Feb.26	16 "	935	1,800	-	8.3	5.2	75	10	X		'ystem failed due to 'ailure of air supply
Mar. 6	16 "	1,680	56	97%	8.0	7.3	75	10	X		'ystem restarted with 'ime but without copper 'emoval
Mar.13	16 "	1,490	80	95%	8.0	7.3	75	10	X		
Apr. 5	16 "	1,085	24	98%	8.0	7.2	75	10	X		
Apr.25	16 "	1,135	28	98%	8.0	7.3	75	10	X		'ystem still working 'ell but sludge build- 'ng up

TABLE III - PILOT PLANT FOR DISTILLERY WASTES

DATE	I.G.P.H.	FEED COD(ppm)	MLSS	AERATOR pH	AERATOR 30 min. settling	Cu.(ppm)	EFFLUENT COD(ppm)	EFFLUENT REDUCTION	REMARKS
May 24	90	228	280	9.4	-	-	127	56%	System started on Lab. sludge, ave. Reduction 40%, no settling
June 14	180	1,040	-	7.0			304	71%	System started June 12th on active sewage sludge
June 25	120	865	4,400	7.2	930	22.0	60	93%	System acclimatized, MLSS increasing rapidly (260 ppm/day)
June 29	120	2,640	2,800	6.8	-	26.1	144	94%	High BOD due to spillage in By-product plant
June 30	120	1,600	2,000	6.1	-	22.0	1,560	2%	Plant overloaded, sludge lost
July 4	120	760	2,250	7.1	790	23.0	190	75%	Plant functioning almost normal
July 13	140	696	3,300	7.1	-	20.0	48	93%	
July 14 - Aug. 14	120	ave.500	ave.3,000	7.2	400	12.0	ave. 40	92%	During shutdown, plant was fed water plus stillage. Settling improved. Normal wastes after Aug. 14th
Aug. 20	150	424	3,470	6.9	400	-	16	96%	Rapid acclimatization to regular wastes
Aug. 30	184	800	3,700	7.8	800	-	80	90%	Settling deteriorated rapidly, but good COD Removal
Sept. 7	158	820	4,600	7.6	900	-	210	75%	Aerator failed, system almost anaerobic overnight
Sept. 9	150	640	4,650	7.4	880	-	28	95%	Rapid recovery from anaerobic condition
Oct. 3	140	1,200	6,950	7.1	910	-	40	97%	Stillage added to improve settling characteristics. Chemical Nutrients discontinued
Oct. 11	130	900	6,050	7.3	400	-	104	89%	
Oct. 15	130	685	8,500	7.4	800	-	96	86%	Performance deteriorating - 50% of sludge removed
Oct. 16	130	350	3,500	7.7	230	-	80	78%	Further deterioration - Plant shut down

TABLE IV - OPERATION OF WASTE TREATMENT PLANT

		FEED			AERATOR		LAGOON DISCHARGE		
		COD	pH	MLSS	pH	COD	pH	COD REMOVAL	Flow Per Day
Oct./69	Max.	2,330	11.0	3,600	7.6	190	7.6	98%	225,000
	Min.	300	5.6	600	6.6	48	6.6	60%	
	Ave.	950	7.8	1,550	7.5	103	7.5	84%	
Nov./69	Max.	7,050	8.1	4,000	7.8	64	7.8	99%	219,000
	Min.	400	5.7	3,150	7.0	32	7.0	95%	
	Ave.	540	6.9	3,550	7.4	48	7.4	97%	
Dec./69	Max.	455	7.6	4,600	7.3	56	7.8	97%	169,000
	Min.	240	6.9	4,300	7.2	16	7.4	93%	
	Ave.	325	7.3	4,375	7.2	40	7.6	95%	
Jan./70	Max.	1,440	8.6	8,100	7.2	56	-	97%	149,000
	Min.	480	5.1	4,800	7.0	40	-	90%	
	Ave.	880	6.8	6,500	7.1	48	-	94%	
Feb./70	Max.	14,800	7.4	10,800	7.1	216	7.2	97%	182,500
	Min.	425	6.4	8,500	6.8	32	7.2	60%	
	Ave.	4,450	6.9	9,200	6.9	115	7.2	84%	
Mar./70	Max.	6,400	6.3	8,900	7.0	104	7.0	99%	170,200
	Min.	475	6.2	8,000	6.8	68	7.0	90%	
	Ave.	2,000		8,300	6.9	88		93%	
Apr./70	Max.	810	6.9	8,500	7.2	76	7.1	92%	190,500
	Min.	705	6.4	3,700	6.8	48	7.0	90%	
	Ave.	740	6.8	4,050	7.0	66	7.0	91%	

P. E. CANSFIELD

"CONSERVATION, RECLAMATION AND RE-USE OF SOLIDS AND WATER IN POTATO PROCESSING"

BY

P. E. CANSFIELD, ASSOCIATE PROFESSOR

R. A. GALLOP, PROFESSOR

DEPARTMENT OF FOOD SCIENCE,
UNIVERSITY OF MANITOBA,
WINNIPEG 19, MANITOBA

Probably the most important processed potato products are frozen French fries, potato chips and dehydrated potatoes. Dehydrated potatoes form the basis for several snack type foods and food products of the "designed" type. Potato chip plants tend to be relatively small operations generally located in or near large towns. This is due to the nature of the product which is bulky and difficult to transport over long distances. In the case of chip plants, waste disposal is normally not a difficult problem. Arrangements are usually made with the local authorities to pass waste into sanitary sewers for treatment in municipal sewage plants. Plants for the production of frozen French fries and dehydrated potatoes are frequently located in rural areas. Plants of this type tend to be large and it is therefore sensible to locate them in areas where land is cheap. It is also sensible to place the plants in the centre of potato growing areas because it is more economical to transport raw potatoes short distances and processed products for longer distances. Rural locations tend to produce problems as far as waste treatment is concerned. Adequate sewage treatment facilities are seldom available and frequently provision for waste treatment must be made by the operators of the plant concerned. The evidence suggests that in the past waste treatment by the potato processing industry has not been particularly successful.

The discussion in this paper will be confined primarily to plants that produce frozen French fries. The remarks apply in the main, to the production of dehydrated potatoes since many of the production details are the same for both types of product and frequently both types are produced within the same plant.

Figure 1 is a flow diagram of the production line in a frozen French fry plant. The initial operation of washing, to remove soil and clay from the tubers, does not introduce a serious waste problem. However the process ensures that the waste effluent from the plant is thoroughly contaminated with microorganisms, some of which might be pathogenic to humans. At the washing stage there is frequently a sorting process in which small, poorly shaped and rotten potatoes are culled.

After the preliminary wash, the potatoes may be preheated, but in any case they are passed through hot caustic soda (lye) solution. The concentration of the lye may vary between 10% and 20%, the temperature may be between 140° and 200°F and the length of time in contact with the lye 1-6 minutes. The lye has a softening effect upon the external tissues of the tubers so that treatment with high pressure water jets will effectively remove the latter. This peeling operation introduces gelatinized starch, protein, sugars, amino acids, connective tissue (mainly cellulose) and suberized tissue into the waste stream.

After peeling, the potatoes are electronically sorted (in the more modern plants) and well peeled potatoes pass directly to the production line. Incompletely peeled potatoes and potatoes with discolored places, pass along tables where work-people cut out and reject discolored tissue. Older plants do not have electronic sorting and all the potatoes pass along the inspection tables. The next stage in processing is slicing and here the tubers are cut into strips, usually of 3/8" or 1/2" square cross-section. After slicing, slivers and small pieces of strip are removed and the relatively uniformly sized strips are passed to the blancher.

The blancher contains hot water. The blanching process performs several functions: (1) it produces a uniformly colored final product, (2) it reduces the absorption of fat by the strips due to the gelatinization of starch on the surfaces of the strips, (3) the strips are partly cooked so the time required for the subsequent frying operation is reduced, (4) the texture of the fried product is improved. Blanching frequently takes place in 2 stages. The blanch water in the first stage is usually plain water but in the second stage it may contain small quantities of added dextrose, sodium pyrophosphate and

calcium lactate, to improve the color or texture of the final product. There is continuous release of blanch liquor to the waste-water stream. Blanching leaches out sugars and other low molecular weight compounds into the blanching liquor and it also releases gelatinized starch which gives the liquor a milky appearance.

The next operation is frying. The potato strips are passed through a bath of molten fat at temperatures of between 350° and 375°. During frying the moisture content of the strips is reduced from 80-90% to somewhere in the region of 65%. During frying, smoke and fumes are produced by the hot fat and a process akin to steam distillation occurs so that substances present in the strips and in the fat, that are normally not volatile, are rendered volatile and these together with fat fumes and water vapour are conveyed via fume ducts to the atmosphere. After frying, surplus fat is removed from the French fries by passage over vibrating screens. In our experience (of various plants), considerable quantities of molten fat pass into the waste-water stream. Since the waste-water is strongly alkaline and it is also hot, partial hydrolysis (saponification) of triglycerides present in the fat tends to occur. The soaps that are formed by this process, together with other surface active agents that have been leached from potatoes during processing, tend to act as emulsifying agents so that some of the fat becomes colloidally dispersed in the waste effluent. Examination of final effluents from French fry plants, after cooling, has shown that they may contain up to 1% dispersed fat and free fatty acids (present as sodium salts) as well as floating particles of solid fat. Fat makes a large contribution to the total organic load of the waste-water from the plant. This fact is demonstrated in Table 1 which shows the results of experiments made with synthetic waste-water.

The final stage in the production line is the freezing of the French fries by passing them through a freezing tunnel or dipping in liquid freon. The French fries are then packed and stored under deep freeze conditions.

The more obvious sources of organic pollution have been listed above. However there are less obvious sources. Potatoes in certain stages of the process are transported from one unit operation to another by flumes and jets of water. The water dislodges starch grains from cut surfaces of the tubers; sugars and other water soluble compounds are also leached from the tissues. The quantity of dissolved matter is usually quite low and the suspended starch grains settle out quite readily if the water is allowed to stand. In several European potato processing plants, starch recovery is practised, the starch grains are separated by sedimentation followed by vacuum filtration and

the starch free water is reused within the plant. The recovered starch is washed and dried and sold. The sale of starch partly offsets waste-water treatment costs. We feel that systems such as these should be used in North America. This would also reduce the very high consumption of water by the potato processing industry. In this connection it should be pointed out that a plant that processes about 750,000 lbs of raw potatoes a day may use up to 1,000,000 gallons of water per day and the quantity of waste-water will approximately equal the quantity of raw water consumed. We feel that very much attention should be paid to the layout of drainage systems within potato plants and that outlets from such operations as initial washing, peeling and blanching should be carefully segregated from outlets where the main impurity is suspended starch. This would enable waste effluents to be treated separately so that much of the water could be reused. We feel that with comparatively minor changes in the drainage systems, water reuse could be practised in many of the potato processing plants that are operating at the present time.

A great deal of solid waste is produced during the processing of potatoes. Under average conditions it takes about 2½ lbs. of raw potatoes to produce 1 lb. of finished French fries. Part of the loss can be attributed to the loss of tissue during peeling and to the loss of water during frying. There is, however, much wastage due to irregularly shaped potatoes and potatoes that are bruised, diseased and rotten. Agricultural scientists at the University of Manitoba and elsewhere are working on the problem of producing uniformly shaped potatoes suitable for processing. They are also trying to improve methods of production, handling and storage of potatoes to reduce losses due to bruising and disease. However, the problem of solid waste is likely to be with the industry for some time to come. Many processing plants operate feed lots and the solid waste is used for feeding beef cattle on these lots. The supply of waste nearly always exceeds the demand and very often it is spread on land to rot. This method of disposal is undesirable since it may lead to the spread of plant diseases and leachates from rotting potatoes may also pass into natural waterways with consequent pollution of the latter. Dr. R.R. Pereira and his students of the University of Manitoba Food Science Department, are using solid potato waste as an energy source for the culture of mixed populations of microorganisms. After harvesting, the microbial cells are dried and utilized as a high protein food supplement.

We are also experimenting with the production of activated charcoal from solid potato waste. We have been able to produce charcoal with excellent adsorptive properties from potato tissues. However potatoes contain 80% water that would have to be evaporated before charring, so

the economics of the process must be carefully considered. Studies of this type are presently in progress. Charcoal produced within a potato processing plant could be used for water treatment in the plant. It could also be used to prepare filters for the purification of air coming from the fryers, thus preventing atmospheric pollution.

It has already been pointed out that the peeling operation is a major source of organic contaminants of waste effluents from potato processing plants. The Western Utilization Research and Development Division of U.S.D.A. has applied itself to this problem and devised a system of "dry caustic peeling". In this system the potatoes are dipped in lye solution and then exposed to infra red radiation within a ribbed rotating steel drum. The radiation treatment and lye cause softening of the superficial tissues of the tubers while water from the lye dip evaporates during radiation treatment. Part of the tissues are removed during passage through the drum; the remainder is removed by a dry brushing treatment between rubber covered rollers. After dry brushing, the tubers require only a brief wash in a barrel or brush washer, before they pass to the normal production line. This process has two great advantages: (1) it reduces the consumption of water, (2) it reduces the quantity of organic matter entering the waste-water stream. A number of processing plants in U.S.A. are to be equipped with "dry caustic peeling" units. However the equipment is likely to be expensive and it would seem that the old technique would be likely to remain in use for a number of years. Dr. M.B. McConnell and his students of the University of Manitoba Food Science Department are carrying out research on new peeling methods. They are attempting to produce a process that will reduce the quantity of tissue removed from potatoes.

The process of blanching is another major source of organic contamination of the waste effluent. Steam blanching would prevent many of the waste problems associated with hot water blanching but the chemical nature of potato tissues prevents the use of this form of blanching at the present time. Blanching and frying cause changes in the chemistry of the potato tissues and these changes may result in the formation of undesirable colors. Hot water blanching enables the latter processes to be controlled. Selective breeding and very carefully controlled systems of cultivation may eventually produce potatoes that could be processed without the danger of undesirable color changes. Active research in the area of potato chemistry is being carried out in our department by Dr. H.M. Henderson, Dr. M.B. McConnell and the authors. We are fortunate in having Dr. M. Birecki in the department. He is a very well known potato agronomist and he acts in a liaison capacity between our department and others in the University of Manitoba Faculty

of Agriculture who are interested in improving the processing qualities of potatoes.

The contamination of waste-water by fat from the fryers could, we feel, be avoided. The fat used in frying has a limited lifetime but used fat can be sold for industrial purposes. It seems a great pity that it should be allowed to enter the waste-water stream where it can cause problems. Proper attention to fryer design and to the location of drainage channels would eliminate this problem.

The purification of waste-water from the French fry industry will now be considered. Reuse of water within a processing plant would result in reduced volumes of effluent but the effluent would have a higher content of organic matter. The main organic constituent found in French fry waste-waters, apart from fat, is starch. Much of the starch occurs in the partly gelatinized or fully gelatinized state and much of it is colloidally dispersed in the waste-water. The effluent also contains protein, pectin and other polysaccharides, as well as peptides, dextrins, higher oligosaccharides, sugars, amino acids, glycerol, sodium salts of fatty acids and polyphenols. The effluent is strongly alkaline with a pH value of 12 or higher. Although there is abundant evidence that effluents of this type can be treated quite successfully by conventional biological treatment plants, waste treatment continues to be a problem within the industry. In the majority of cases, the waste-water is impounded in lagoons where it turns black in color, develops a foul odor and appears to undergo a negligible degree of purification. We, in the Department of Food Science, have applied ourselves to the problem of effluent purification and we have produced a chemical treatment system. This system appears to remove a rather high proportion of the total organic matter present, mainly material of high molecular weight. Most of the work has been carried out in the laboratory but we have just completed a pilot plant. The plant will initially be working as a batch type operation but we hope to get it working continuously. We may have to dismantle the plant and reassemble it in a commercial French fry plant since we can only deal with limited quantities of waste in our present building. The economics of operating the process are of course of great interest to us and we will have information about this when pilot plant studies have been completed.

Although the treatment process is very good for the removal of high molecular weight organic matter from waste-water, it does not remove small molecular species. Dr. V. Rasper is working on this latter problem. Sugars form the major group of low molecular weight compounds present in French fry processing waste-water and Dr. Rasper is studying

certain reactions of sugars that could be used for waste treatment. Dr. Pereira and one of his students are tackling the same problem but their approach is to use microorganisms to metabolize the sugars. Treatment by the latter method would yield a high protein concentrate as a by-product.

Acknowledgements

The authors wish to thank the Manitoba Department of Agriculture and the Federal Department of Energy, Mines and Resources, for financial support for their research.

FIGURE I SCHEMATIC DIAGRAM OF CONVENTIONAL POTATO PROCESSING LINE

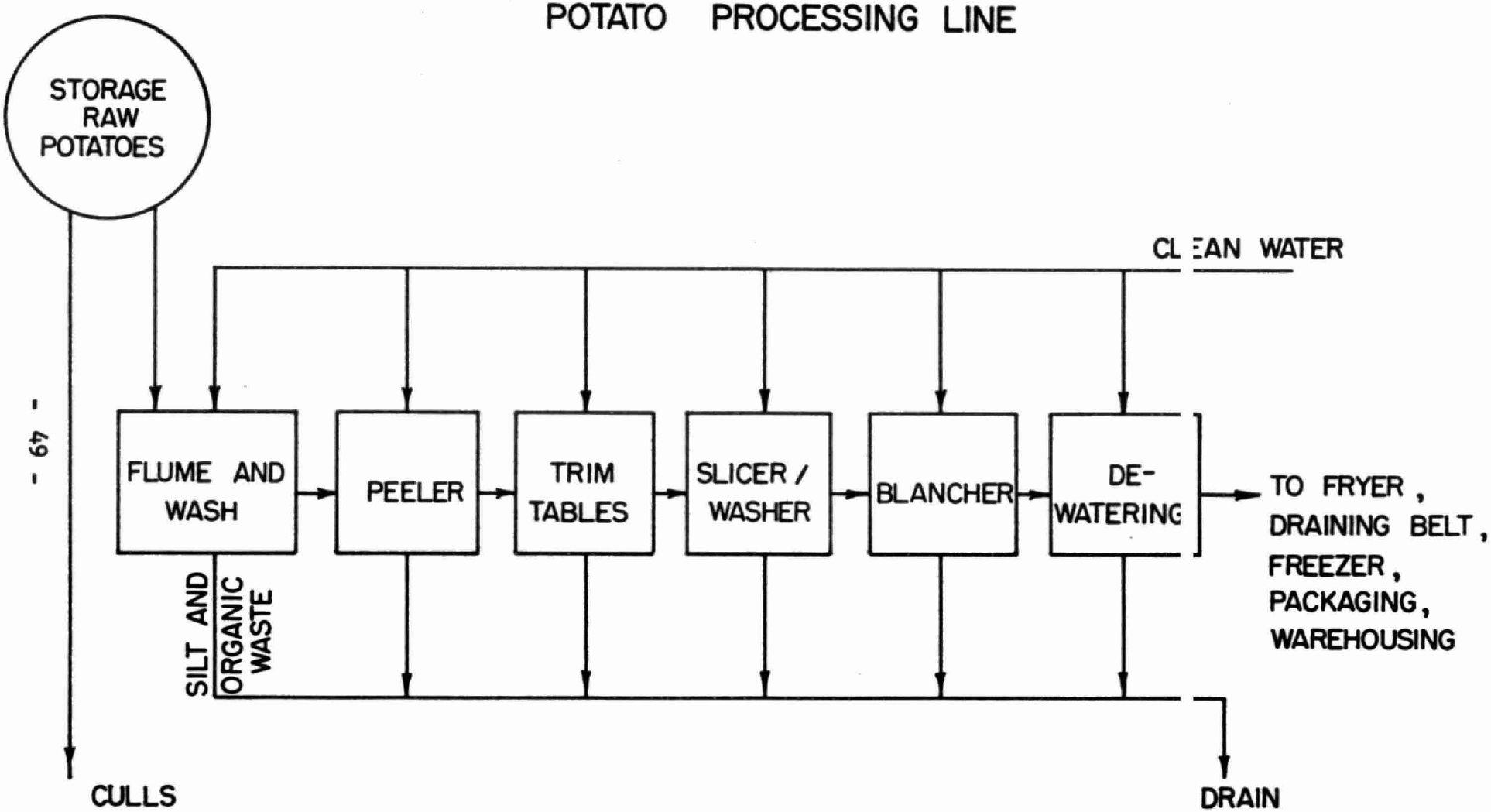

Table 1. C.O.D. determinations made on simulated lye-peel waste-water, lye-peel waste-water supplemented with 1% fat and waste-water purified by the Manitoba Food Science process.

COD of lye-peel waste-water	COD of lye-peel waste-water + 1% fat	COD of purified waste-water	COD of purified waste-water after activated carbon treatment
4,500 mg/litre	22,750 mg/litre	758 mg/litre	540 mg/litre

References

1) Smith Ora (1968). Potatoes: Production, Storing, Processing. pp. 574-575. The Avi Publishing Co., Westport, Conn.

2) Graham R.P., Huxsoll C.C., Hart M.R., Weaver M.L., and Morgan A.I. (1969). "Dry" Caustic Peeling of Potatoes. Food Technology, 23, 61-67.

Conservation, Reclamation and Re-Use of Solids

and Water in Potato Processing

P.E. Cansfield and R.A. Gallop

Addendum

The following additional material is included. The substance of this was brought out by questions from the audience after the paper had been read.

Alternative peeling methods. Potatoes for potato chip production are peeled by an abrasion technique in which the peel is removed by contact with carborundum coated rollers and by washing with water jets. This form of peeling removes very much less tissue from the tubers than does lye peeling. However incompletely peeled patches may remain on certain tubers and chips with fragments of peel on the edges are the result. Apparently consumers do not object to this. However attempts to use abrasion peeled potatoes for French fry production have failed because consumers object to fragments of peel on French fries. The use of abrasion peeling for French fry production would reduce the waste problem considerably.

Another method of peeling, adopted primarily for the production of French fries and dehydrated potatoes, is referred to as "steam peeling." The potatoes are heated for a short time with steam in pressure vessels. Under these conditions the outside layers of tissue are cooked and the peel can be removed with the aid of jets of water. Thus use of lye, with consequent high cation content and alkalinity, is avoided. However steam peeling is a batch process while lye peeling is a continuous process and thus offers greater advantages to the manufacturer.

Disposal of potato processing waste water by land spraying and irrigation.

Disposal of waste effluents by irrigation of land is one of the oldest methods of treatment. It was used in Europe quite extensively, for the treatment of sewage but apparently its present use is primarily confined to the less well developed countries. Land spraying has been used successfully for the disposal of cannery wastes. To be successful the soil must have an open texture with a moderate to low clay content. Extensive areas of land must be available and the land must be close to the plant producing the waste. In this form of waste disposal the soil is used as a sort of gigantic, trickling filter. Decomposition of organic constituents present in the waste water is accomplished by the soil micro-flora. Land spraying is most

successful if the land is covered with grass since transpiration from the latter results in loss of water from the soil. There are limitations to the use of land spraying. Under the conditions of climate of Canada and the northern states of U.S.A., the soil is in a suitable condition for spraying for only about 4 months of the year. Hence the effluent must be stored (in lagoons) until conditions for land spraying become suitable. Very great care must be taken to ensure that the land is not overloaded with effluent since contamination of aquifers could be the result. Experiments in our laboratory conducted by Dr. M. Birecki have shown that land spraying of lye-peel waste from potato processing plants is only possible when very sandy soils are available. In soils where the clay content is relatively high, deflocculation of clay minerals occurs due to the high concentration of sodium ions present in the waste. The latter phenomenon slows the penetration of the soil by the waste-water to very low rates and the penetration may cease altogether.

It was pointed out to us during the present conference that at least two French fry plants (one in the Province of Alberta and one in the state of Washington, U.S.A.) have turned from lye peeling to steam peeling, with effluent disposal by land spraying. Land spraying should prove a very effective method of disposal for steam-peel waste-water, although the production and climatic limitations mentioned above must be borne in mind. In our experience variations of the lye peeling process seem to be most prevalent in N. America. It was mentioned in the paper that experimental work on potato peeling is in progress in our laboratory. The processes under investigation employ neither lye nor steam.

"SUBMERSIBLE RECORDING CURRENT AND WATER QUALITY METERS"

BY

M. D. PALMER
ENVIRONMENTAL ENGINEER

ONTARIO WATER RESOURCES COMMISSION
TORONTO, ONTARIO

INTRODUCTION

Electrical-chemical and mechanical sensors capable of measuring water velocity, pressure, temperature, conductivity, chlorides, dissolved oxygen and turbidity have been used in research and industry for many years (Chapman, 1969) to provide instantaneous insitu measurements for process control. Scientists and engineers involved in water management programs appreciated the potential of these sensors for continuous water quality evaluation. The first water quality meters employing sensors appeared in the late 1950's in North America and many types are available now. Equipment built to date has employed standard sensors such as conductivity cells, pH electrodes, oxygen electrodes coupled to the appropriate electronic interfaces and recording device. The type of analysis carried out has been governed by the sensor availability. The recent development of the specific ion sensors capable of measuring flourides, nitrates, sulphides, chlorides, calcium, copper and others coupled with the new development of appropriate electronic interfaces will certainly lead to a more extensive application of continuously recording meters in the future. While it would be unwise at this time to minimize the difficulties

associated with both the operation of the sensors and the electronic interfaces, developments are encouraging. It must be stated that it is unlikely that the meters will replace laboratory analysis and should be envisaged as an extension and amplification of laboratory analysis. The meters do provide a high volume of continuous analysis inexpensively, which is a basic requirement for both process control and modelling. A good system for data processing of the meter results is probably the weakest link in the operation of the meters presently.

The Ontario Water Resources Commission has owned and operated shore-based recording type water quality meters, frequently referred to as 'robots', for several years. This paper will discuss some applications for water management based upon information gathered from a small completely self-contained submersible water quality meter and a recording current meter manufactured by Plessey Canada Ltd. operated on Lake Erie at Nanticoke. Current meters record direction, velocity and temperature at a fixed time interval. Water quality meters record real time, pH, conductivity, turbidity, dissolved oxygen, temperature etc. at a fixed time interval. Both meters were purchased by the Steel Company of Canada, installed by the Hydro Electric Power Commission of Ontario and operated by the Ontario Water Resources Commission.

STATEMENT OF THE PROBLEM

The nearshore areas of the Great Lakes are complex water environments. A detailed understanding of the processes in those areas is necessary to protect the water resource for water users. The required precision of this understanding is related to the density of water users on the lakeshore. It has been found that biological, chemical and physical characteristics vary a great deal with time and location. Consequently, it is frequently difficult to arrive at a valid conclusion concerning the quality of the environment without long lengths of records to define these variations. From the histories, it is possible to detect changes and define environmental characteristics with the appropriate probabilities. Recording meters and computer modelling are being employed by the Ontario Water Resources Commission in both the planning and design phases of intakes and outfalls.

At Nanticoke on Lake Erie, numerous water users are proposing to locate in close proximity to each other. This new regional development poses many questions to the users concerning the best location(s) for water intakes and sewage outfalls. The answers to these questions can be achieved in large measure

by operating recording meters. Similarly, the question of how the water chemistry varies with both time and space is best answered with meters.

DISCUSSION

A sample of the results from a water quality meter is presented in Table 1. Then a frequency analysis of the data was carried out to determine the type of variation of water chemistry with time (see Figures 1 and 2). The distributions are plotted on probability paper where a normally distributed parameter would appear as a straight line. Normal distributions are expected where many varying different processes are combining to produce an effect. For example, the dissolved oxygen may be a result of varying municipal and industrial discharges, water temperatures, biological growths, currents and meteorological conditions. Note the difference between pH in Figure 1 between two successive months at the same location. The distribution in May approaches a normal curve while the distribution in June is remote from a normal curve. Non-normally distributed properties are common in both the biological and social sciences as a function of the process, where one or two factors which are not normally distributed are responsible for the result. Non-normal distributions are also often generated by the characteristics of a particular evaluation technique. e.g. the necessity of selecting only designated values for a test, readings at the limits of sensitivity often produce biases. Variation associated with different geographical locations is indicated (not concurrent months) by the dissolved oxygen results (Figure 2). Dissolved oxygen results for June in the Nanticoke area approached normal while September Port Maitland dissolved oxygen is non-normal. The unpredictable nature of the distributions with respect to time and space indicate the need for an intense sampling program (probably in excess of 40 samples to determine mean values). Similar results have been found by others (Brydges, 1969, Shiomi, 1970 and Palmer, 1968) on the basis of grab samples. The continuous recording meters not only confirm the variation but identify whether it is normal or non-normal.

The application of parametric statistics for the analysis of water quality data is not generally valid. Parametric statistics are restricted to parameters which are normally distributed. Non-parametric methods must be employed for determining the characteristics of the nearshore areas of lakes. Non-parametric statistics can be used for any distribution. This means that statistics e.g. mean, maximum and minimum value of any parameter, must be determined from a frequent sampling program to

RECORD 2 PAGE

TIME DAY,HR	DEPTH FT.	TEMP. D.CENT.	DO %	S SOLIDS SU	BINARY SS. NO	PH	CONDUCT(18 C.) UMHOS/CI	DATA COND	CYCLE
90569/ 0.07	20.87	10.89	97.90	26.48	540	8.67	279.43	#	1
90569/ 1.09	20.87	10.89	98.16	26.48	540	8.63	284.71		2
90569/ 2.10	20.87	11.01	97.90	33.31	551	8.60	278.52		3
90569/ 3.09	20.87	10.78	98.41	48.40	568	8.58	280.34		4
90569/ 4.08	20.87	10.43	98.03	0.0	522	8.58	282.60		5
90569/ 5.11	20.87	10.20	98.16	0.0	528	8.60	279.09		6
90569/ 6.12	20.87	10.32	98.16	5.84	533	8.58	283.53		7
90569/ 7.13	20.87	10.43	98.03	21.34	539	8.58	282.60		8
90569/ 8.14	20.87	10.32	98.29	21.34	539	8.56	278.18		9
90569/ 9.14	20.87	10.09	98.29	57.70	576	8.54	280.01		10
90569/ 10.16	20.87	10.09	98.67	78.48	590	8.62	280.01		11
90569/ 11.20	20.87	10.20	98.80	52.85	572	8.66	279.09		12
90569/ 12.07	20.87	10.32	98.29	63.00	580	8.63	278.18	#	13
90569/ 13.10	20.99	10.55	98.29	91.53	597	8.62	282.19		14
90569/ 14.11	20.87	10.55	98.67	4.71	532	8.59	282.19		15
90569/ 15.10	21.63	10.55	98.16	17.19	538	8.57	282.19		16
90569/ 16.09	22.64	10.66	97.90	29.85	546	8.50	281.26		17
90569/ 17.13	23.15	10.78	96.76	36.38	555	8.46	280.34		18
90569/ 18.13	23.02	11.24	95.62	34.81	553	8.34	281.95		19
90569/ 19.14	22.64	11.81	94.03	35.58	554	8.39	283.04		20
90569/ 20.15	22.64	11.93	93.39	38.85	558	8.49	282.14		21
90569/ 21.15	22.01	11.93	94.16	34.05	552	8.51	271.85		22
90569/ 22.17	21.63	11.93	94.16	31.19	548	8.42	271.85		23
90569/ 23.21	21.50	11.93	94.03	29.85	546	8.47	271.85		24
100569/ 0.07	20.99	11.93	93.39	29.20	545	8.56	271.85	#	25
100569/ 1.10	20.36	11.93	93.39	28.57	544	8.62	266.72		26
100569/ 2.12	20.49	11.93	93.27	40.78	542	8.59	266.72		27
100569/ 3.10	20.49	11.93	93.14	32.86	541	8.60	266.72		28
100569/ 4.11	20.49	11.93	93.14	40.78	542	8.59	266.72		29
100569/ 5.13	20.99	11.93	92.50	32.86	541	8.59	266.72		30
100569/ 6.15	20.99	11.93	92.38	26.48	540	8.57	266.72		31
100569/ 7.16	21.25	11.93	92.25	26.48	540	8.58	266.72		32
100569/ 8.16	21.50	11.93	92.38	17.19	538	8.59	266.72		33
100569/ 9.16	21.63	11.93	92.38	17.19	538	8.58	266.72		34
100569/ 10.18	21.76	11.93	92.63	17.19	538	8.57	266.72		35
100569/ 11.21	21.76	11.93	92.63	28.57	544	8.57	266.72		36

TABLE I

WATER QUALITY METER RESULTS

FIG. 1

pH

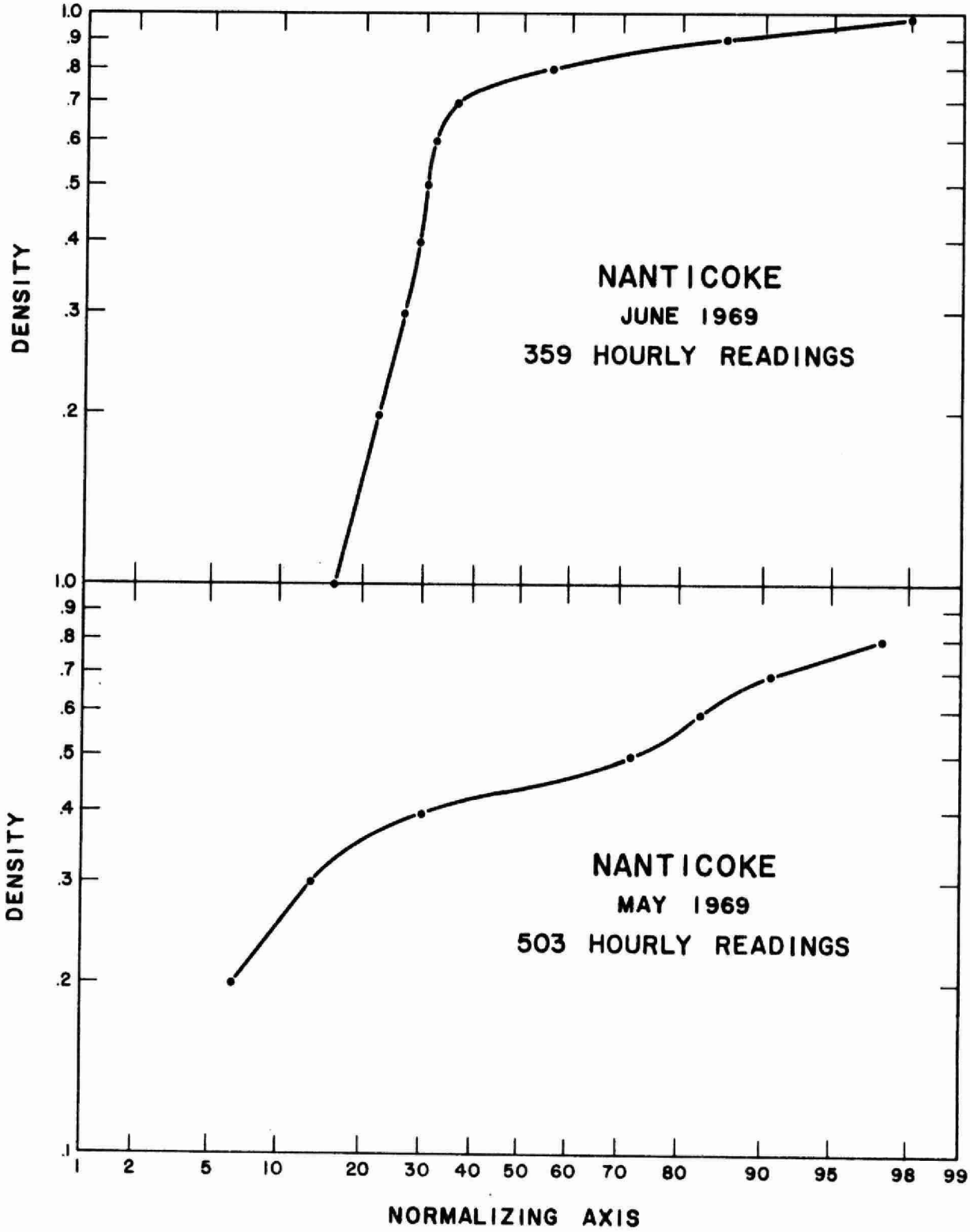

70-50-GL

FIG. 2

DISSOLVED OXYGEN % SATURATION

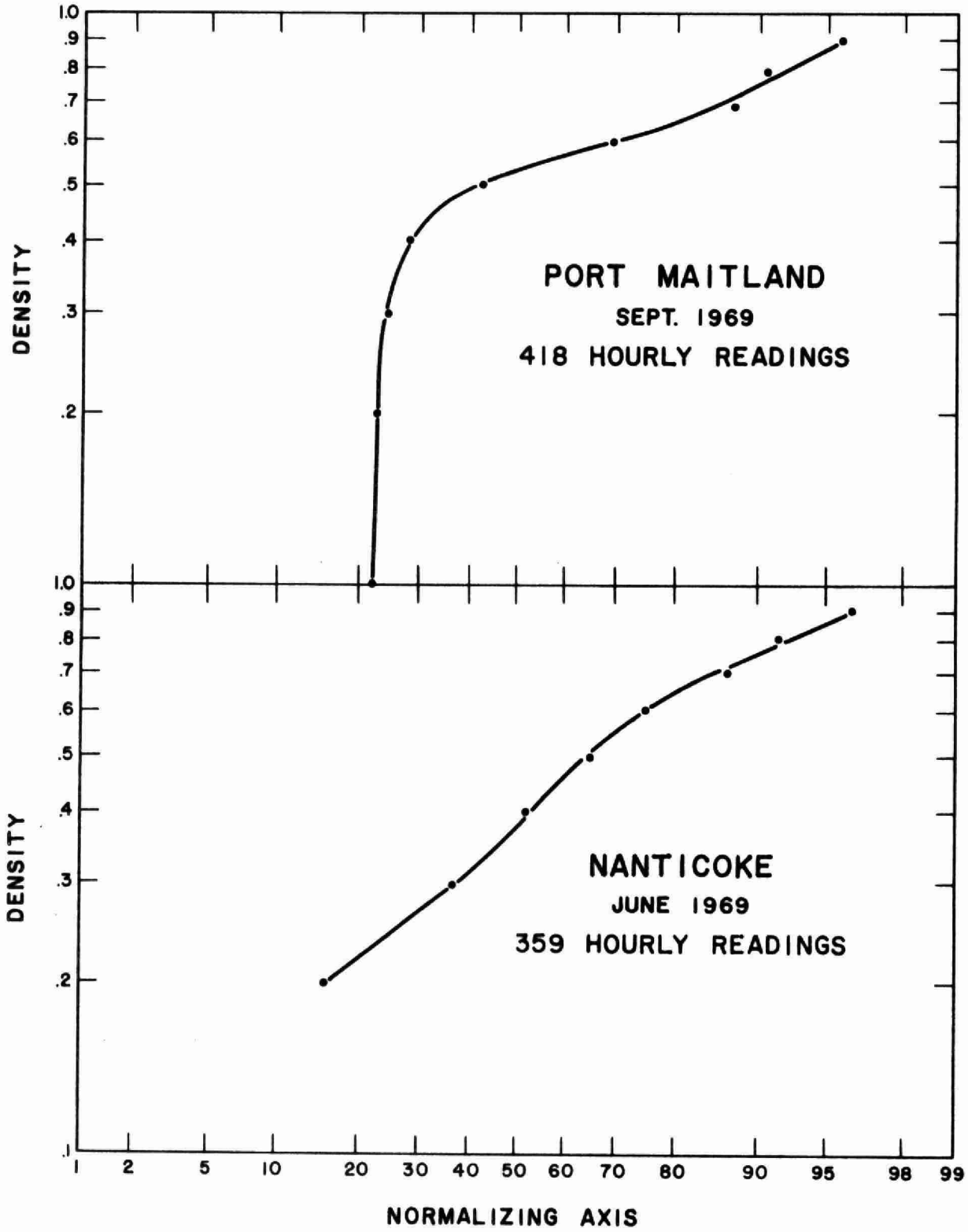

70-49-GL

be meaningful. Parametric statistics could produce the wrong conclusions. It also indicates that modelling or prediction techniques must be probabilistically based. Simple deterministic equations such as $y = mx$ must be associated with a probability indicating that the equation is valid a certain percentage of the time.

The extensive continuous data obtained from a recording device permit the application of a standard analytical method called time series analysis which has probabilistic characteristics. These techniques are well defined and numerous computer programs are available for data processing. The data must be a perfect continuous record with no gaps or bad readings for time series analysis. To obtain this perfect record, it is necessary to edit and shape the measured data. Care must be taken in designing and executing edits. Analytically, time series analysis is very powerful as it maintains the sequence of events as recorded. It considers the variations with respect to time and permits the comparison of two independent time histories measured independantly. As water movement is a vector, it is possible to develop dispersion patterns from current meter records (Palmer, 1969) then correlate water movement with water chemistry for a numerical model if the chemical changes are related to water movement. The model can be extended to cover an area by correlating two meters separated by a distance. Time series methods are presently being used to predict mean monthly dilution characteristics or monthly dilution estimates resulting from water movements only. The models are two dimensional and must be applied to areas where stratification with depth is not important. Three dimensional current meters presently under user trials should relieve this restriction as far as field measurements are concerned. However, the magnitude of the vertical mixing term is so small compared to the horizontal mixing on the lakes that analytical problems will probably result.

Another method of analyzing the data uses a Markov chain approach (Bharucha-Ried, 1961). This is a probabilistic or stochastic approach which is independant of the distribution of parameters. It involves examining the measured series of events (history) e.g. hourly currents, hourly temperatures etc. and developing probabilities of sequences of events occurring. For example, if the water temperature is $7^{o}C$ now, what is the probability of it being $6^{o}C$ two hours from now, in the month of June. From the sequence probabilities, it is possible to develop dispersion patterns (Palmer 1969, 1970). This method has been used to predict hourly dispersion characteristics.

CASE STUDY

Recording meters were operated at locations 021 and 024 in the Nanticoke area of Lake Erie (see Figure 3). The meters were operated from May to December, 1969. The following comments are restricted to the discussion of one month, June 1969 for the purposes of indicating the procedure. The current meter data at positions 021 and 024 have been processed to produce monthly dilution concentration contours for a continuous point discharge of 1.08×10^6 cm^2/sec (1.16×10^3 ft^2/sec). The concentration contours in Figure 3 represent mean monthly values in terms of the percentage of the input concentration. A comparison of positions 021 and 024 indicates that June dilution characteristics are much better at location 024 than location 021. The persistence factors indicate the variability of the water movements during the month of June. A persistence factor of one indicates that the water movement is consistently in the direction represented in Figure 3 (time in one direction/total time). Consequently, from a discharge point of view location 024 is preferred to location 021 for lake dilution in June. The mean monthly concentrations at the discharge point can also be determined on the basis of permissible downstream concentration (water quality objectives). By operating the meters for many months, a complete picture of the dispersion characteristics month-by-month is obtained. It is then possible to select the best possible location of waste discharge which would minimize water quality impairment and water use conflicts.

Local concentrations can exceed the monthly mean by several standard deviations (Gifford, 1960); consequently, it is necessary to examine the hourly dispersion characteristics and not just the monthly averages. The results of a Markov chain analysis of the current data for June 1969 for 8 hour intervals appears in Figure 4. Hourly dilution characteristics for the eight major points on the compass are illustrated. It is observed that the dispersion is predominately parallel to the shoreline and the hourly dispersion characteristics at location 024 are better than at location 021. It is possible to compute the maximum, mean and minimum eight-hour concentrations with associated probabilities for any points in the vicinity of the meter for various discharges.

Extending the dilution or dispersion predictions computed from current meter measurements to water chemistry is achieved with recording water quality meters. Two methods have been used to date. The measured water chemistry parameters are first subjected to data smoothing and trend removal, then they are

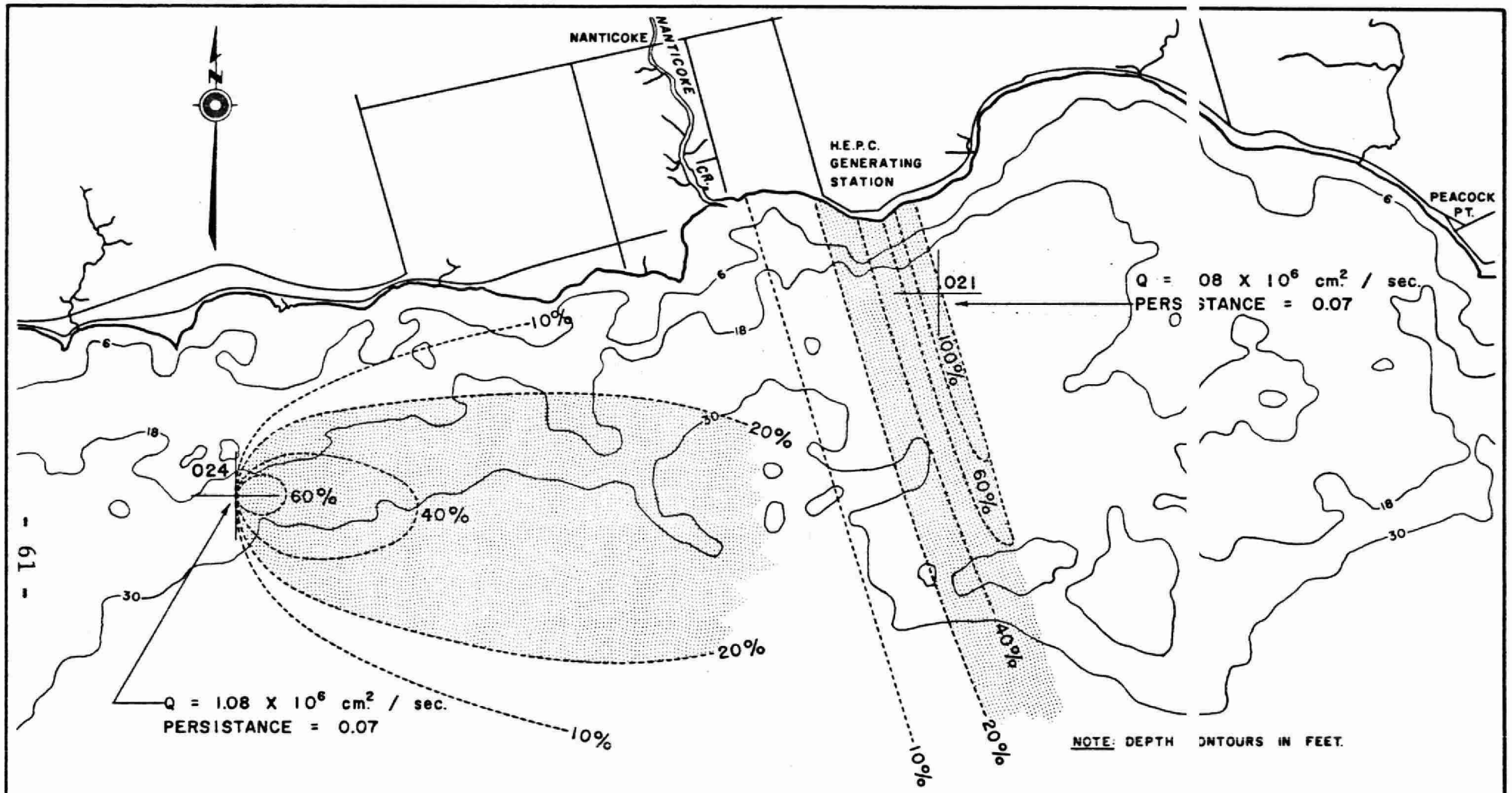

LAKE ERIE
(LONG POINT BAY)

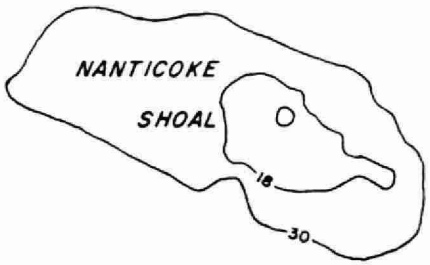

LEGEND

021 - 9 FT. FROM BOTTOM
024 - 15 FT. FROM BOTTOM

FIG. 3

ONTARIO WATER RESOURCES COMMISSION	
NANTICOKE CONCENTRATION CONTOURS JUNE, 1969	
SCALE: 1/2 1/4 0 1 MILES	
DRAWN BY: R.S.	DATE: JAN., 1970
CHECKED BY:	DRAWING Nº: 70-1-GL

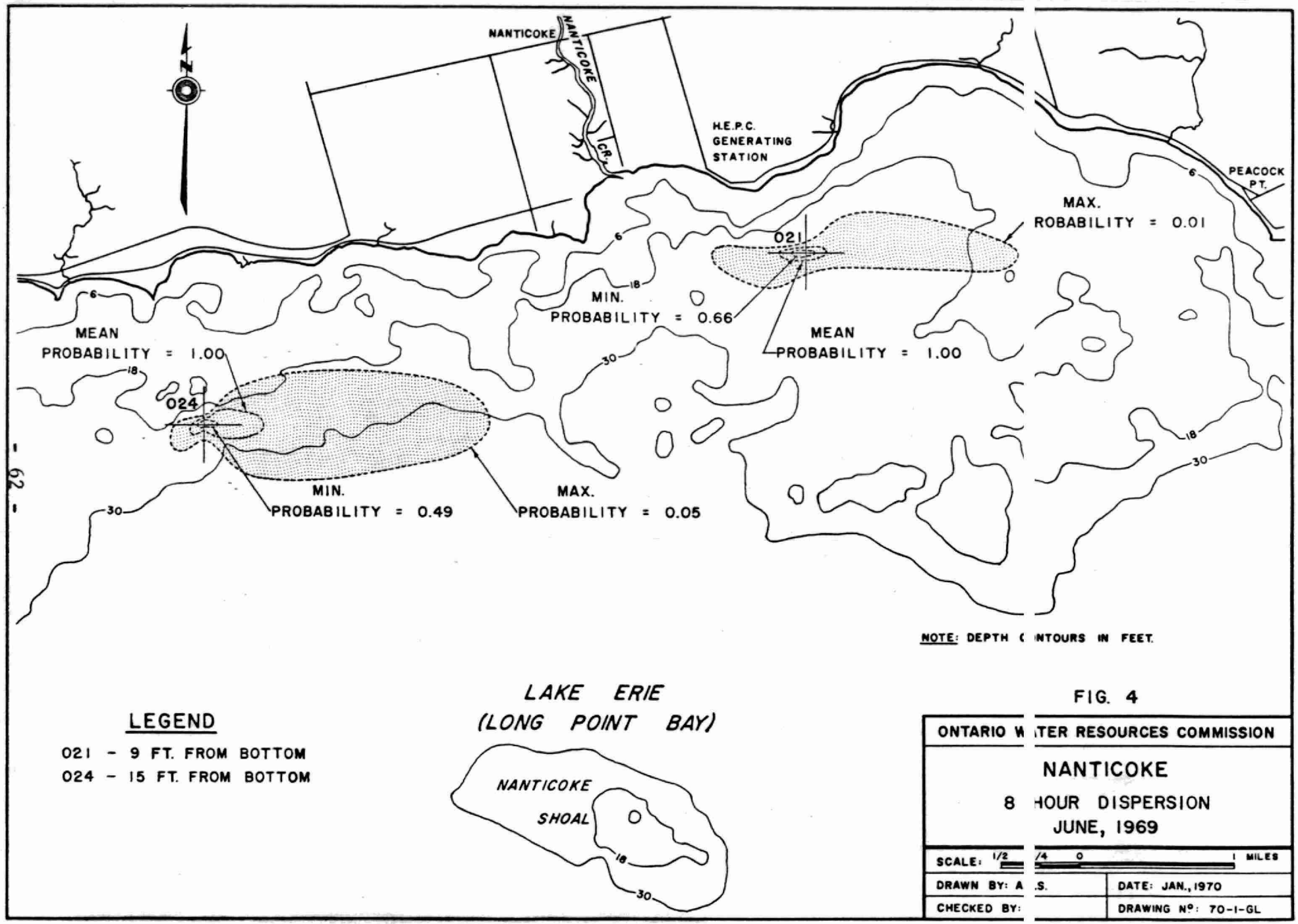
NANTICOKE
NANTICOKE
CR.
H.E.P.C.
GENERATING
STATION
PEACOCK
PT.
MAX.
PROBABILITY = 0.01
021
MIN.
PROBABILITY = 0.66
MEAN
PROBABILITY = 1.00
MEAN
PROBABILITY = 1.00
024
MIN.
PROBABILITY = 0.49
MAX.
PROBABILITY = 0.05
6
18
30
NOTE: DEPTH CONTOURS IN FEET.
LAKE ERIE
(LONG POINT BAY)
NANTICOKE
SHOAL
LEGEND
021 - 9 FT. FROM BOTTOM
024 - 15 FT. FROM BOTTOM
ONTARIO WATER RESOURCES COMMISSION
NANTICOKE
8 HOUR DISPERSION
JUNE, 1969
SCALE: 1/2 1/4 0 1 MILES
DRAWN BY: A.S.
DATE: JAN., 1970
CHECKED BY:
DRAWING No: 70-1-GL

FIG. 4

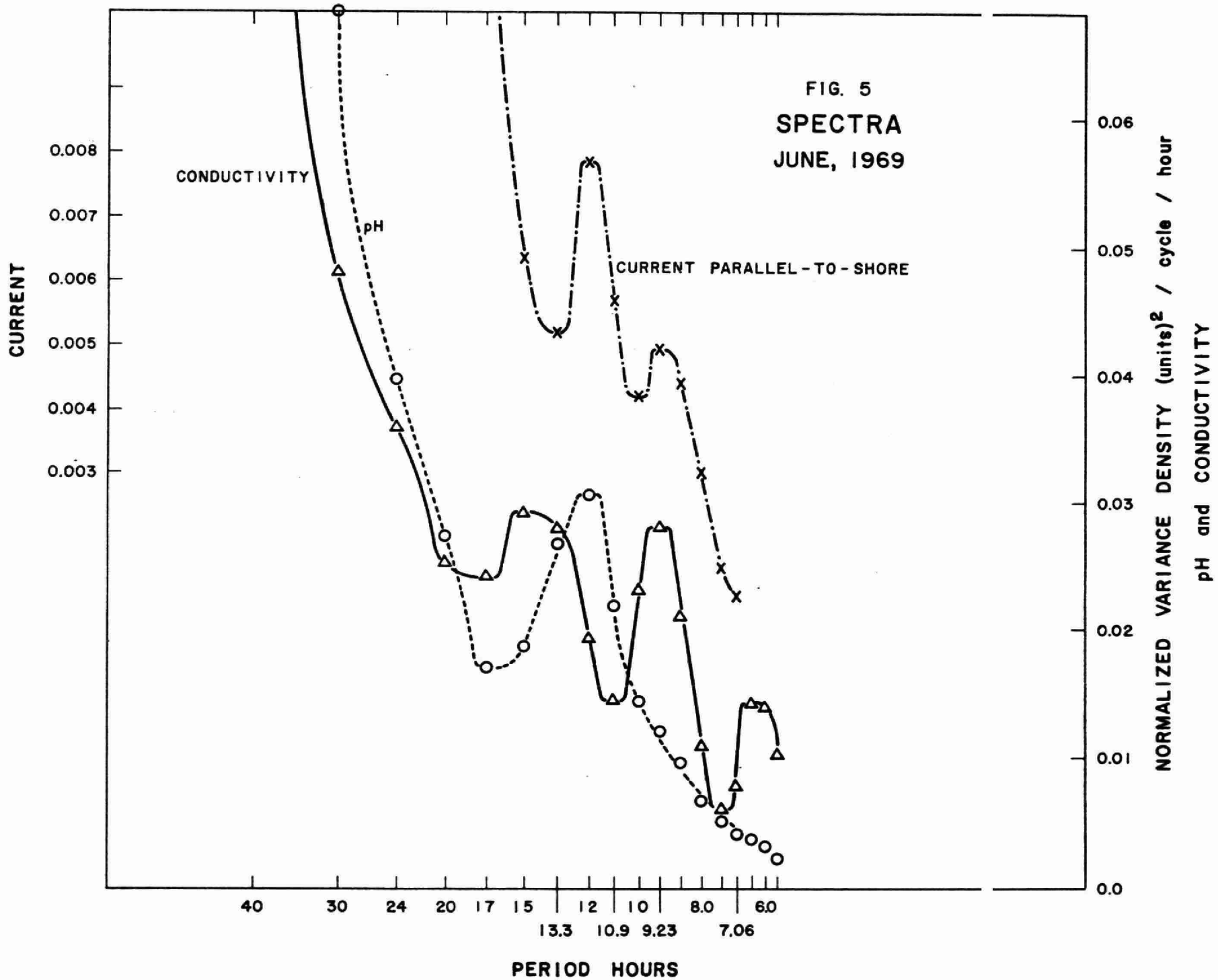
FIG. 5
SPECTRA
JUNE, 1969
CONDUCTIVITY
pH
CURRENT PARALLEL-TO-SHORE
CURRENT
0.008
0.007
0.006
0.005
0.004
0.003
0.06
0.05
0.04
0.03
0.02
0.01
0.0
NORMALIZED VARIANCE DENSITY (units)^2 / cycle / hour
pH and CONDUCTIVITY
40
30
24
20
17
15
13.3
12
10.9
10
9.23
8.0
7.06
6.0
PERIOD HOURS

cross-correlated with currents. A sample spectra for conductivity, pH and current for June appears in Figure 5. It is observed that pH has only a single peak at the diurnal period whereas conductivity has multiple peaks similar to the parallel-to-shore water movement. In this case, conductivity is related to the parallel-to-shore currents and pH is not. If the cross-correlation is good (coherences above the significance level) the models developed for the currents can be directly applied for that water chemistry parameter. The second method develops hourly sequences on a probability basis by subjecting the data to a Markov chain process analysis. Details of this technique will be presented at the National Symposium on Data and Instrumentation for Water Quality Management, July 22 in Madison, Wisconsin.

SUMMARY

The utilization of recording meters in the nearshore areas of lakes provides the necessary data for a computer model which will indicate:

1. The best location for water intakes and waste outfalls from the dilution point-of-view.

2. The acceptable discharge concentrations and flows on the basis of not exceeding desirable values at locations in the proximity of the discharge point on a probability basis.

The highly variable environmental characteristics in the nearshore areas of lakes require extensive sampling if knowledgeable decisions are to be made by water users. Continuous recording meters can provide this necessary volume of information on a 24-hour basis in computer processable format. The limitations of the meters can be overcome by combining the meters with periodic conventional laboratory analysis.

GLOSSARY OF TERMS

1. Coherence - A number ranging from zero to one which defines how well two variables compare for various time periods. One is a perfect comparison, and zero is no comparison.

2. Cross-correlation coefficient - A number normally ranging from -1 to +1 which estimates how well two variables compare at various time periods.

3. Non-parametric - Not restricted to normally distributed populations.

4. Markov chain - A mathematical technique of representing the probability of a sequence of events.

5. Parametric - Restricted to normally distributed populations.

6. Persistence factor - A number ranging from zero to one which compares the vector resultant with the arithmetic mean of the magnitude for the period considered. e.g. the persistence factor for a pipe is one while on the lakeshore varies from completely random motion (persistence of zero) to currents predominantly in one direction (persistence of 0.8-0.9).

7. Time series analysis - Mathematical methods for analyzing a series of readings collected regularly over a period of time in such a way that the sequence is maintained.

8. Vector - Water movement and wind are vectors which have both magnitude and direction.

REFERENCES

(1) BHARUCHA-RIED, A.T., 1961 "Elements of the Theory of Markov Processes and Their Applications". McGraw-Hill Book Co. Inc., New York.

(2) BRYDGES, T.G., 1969 "Investigations of Daily Variations in Chemical, Bacteriological, and Biological Parameters at Two Lake Ontario Locations Near Toronto". Part 1 - Chemistry. Proc. 12th Conf. Great Lakes Research, p. 750.

(3) CHAPMAN, R.L., 1969 "Environmental Pollution Instrumentation". Selected papers from Symposia. Instrument Society of America, Pittsburgh, Pennsylvania.

(4) GIFFORD, F., 1960 "Peak to Average Concentration According to a Fluctuating Dispersion Model". Int'l. Jour. Air Pollution. Pergamon Press. v.3, 4, p.253.

(5) PALMER, M.D. and J.B. IZATT, 1969 "Great Lakes Nearshore Modelling from Current Meter Data". Ontario Water Resources Commission, Great Lakes Program, 135 St. Clair Ave. W., Toronto.

(6) PALMER, M.D. and J.B. IZATT, 1970 "Lakeshore Two-Dimensional Dispersion". Ontario Water Resources Commission, Great Lakes Program, 135 St. Clair Ave., W., Toronto.

(7) PALMER, M.D. and G.K. SATO, 1968 "Review of Water Quality Density Statistical Procedures". Ontario Water Resources Commission, Great Lakes Program, 135 St. Clair Ave. W., Toronto.

(8) SHIOMI, M.T. and V.K. CHAWLA, 1970 "Chemical Limnology". Proc. 13 Conf. Great Lakes Research (In print).

SESSION CHAIRMAN,
DR. G. W. HEINKE,
DEPARTMENT OF CIVIL ENGINEERING,
UNIVERSITY OF TORONTO,
TORONTO, ONTARIO.

A. GOLOMB

"REVERSE OSMOSIS - A REVIEW OF ITS APPLICATIONS TO WASTE TREATMENT"

BY

A. GOLOMB, RESEARCH SCIENTIST
F. BESIK, RESEARCH ENGINEER

ONTARIO RESEARCH FOUNDATION
SHERIDAN PARK, ONTARIO

HISTORICAL INTRODUCTION: MEMBRANE DEVELOPMENT

The process of osmosis is as old as life itself, and is the basic means by which plants and animals derive their sustenance, by selective transport of water and certain chemicals through the cell walls, which function as semipermeable membranes.

Osmosis can be defined as the spontaneous flow of a solvent (e.g. water) through a semipermeable membrane into a solution - or from a dilute to a more concentrated solution.

The phenomenon of osmosis was first demonstrated in 1748, but it was not until the first half of the twentieth century that scientists[1,2] became aware of the possibilities of utilizing reverse osmosis ('hyperfiltration') as a laboratory technique for effecting difficult separations of substances in solution. The principle of Reverse Osmosis (R.O.) is illustrated by Fig. 1.

In the late 1950's, Reid[3] and co-workers at the University of Florida discovered, during extensive screening of candidate film-forming materials for R.O., that fully-dense films of cellulose acetate, cast from simple acetone solutions, exhibited almost unique semipermeability toward salt water. Although water flux was low, rejection for salt and a number of other solutes was high.

Soon after, in 1960, Loeb and Sourirajan[4] at UCLA filed patents for the first high flux, high rejection cellulose acetate membranes from the following casting solution:-

	w/w
Cellulose acetate	22.2%
*Magnesium perchlorate	1.1%
Water	10.0%
Acetone	66.7%
	100.0%

In 1967, Manjikian[6], also working at UCLA, published details of an all-organic casting solution, of composition:

	w/w
Cellulose acetate	25.0%
Formamide	30.0%
Acetone	45.0%
	100.0%

Whereas membranes prepared from the original Loeb-Sourirajan formulation had to be cast below 0°C, this modified solution permitted casting of highly reproducible membranes at room temperature - presenting the additional advantage of economy. Thus the large scale manufacture of cellulose acetate membranes became a viable commercial proposition for the first time. Volume quantities of cellulose acetate R.O. and ultrafiltration membranes are now marketed as rolls 24" x 1000' long by Eastman Chemical Products Inc.[7,8]. Current bulk prices amount to 38¢ per sq.ft.

Electron photomicrography (Fig. 2) of typical Loeb-Sourirajan cellulose acetate membranes[9] has demonstrated the existence of an anisotropic structure, i.e. a skin of dense cellulose acetate (0.25μ thick) surmounted on a porous substructure (99.75μ thick).

The dense, non-compactable 'skin' acts as the rejecting or semipermeable layer, while the underlying substructure functions as a porous support. During prolonged operation, however, especially at high pressures (e.g. 1500 psi), these membranes have a tendency to compact by plastic deformation, with serious flux decline. Currently, widespread efforts[10] are under way to develop 'ultrathin' reverse osmosis membranes to overcome the compaction problem. Generally the dense ultrathin film is supported on a porous, non-compactable substrate, fabricated as a separate operation. Difficulties of handling the delicate films have so far hampered development of such techniques to any sizeable scale[11].

---

*Mlle. Dobry[5] in 1936 had found that saturated aqueous magnesium perchlorate dissolved cellulose acetate to give membranes suitable for hyperfiltration.

Cellulose acetate membranes of the Loeb-Sourirajan type dominate the present market in commercial applications of reverse osmosis and ultrafiltration. However, other more durable membrane materials are currently under intensive development[12]. The Amicon Corporation, for example, have produced a range of stable ultrafiltration membranes, designated by cut-off values in terms of the molecular weight of dissolved species rejected in aqueous solution.

Also, interest is centred on the development of the hollow fibre concept[13] in which millions of hollow fibres are packed into a tube-and-shell type of arrangement (see Fig. 15), with the feed solution pressurized up to 600psi on the outside of the fibres. The extremely large surface area presented to the feed solution makes it possible to utilise stable membrane materials which have an intrinsically low flux rate for water (expressed in gfd)*.

PROCESSES AND EQUIPMENT

In 1953 the United States Office of Saline Water (OSW) came into being, and immediately began its desalination programme designed to obtain potable supplies of fresh water from sea and brackish waters. This programme, still vigorously active today, embraces research and development of desalination processes based on operations such as distillation, freezing, electrodialysis and reverse osmosis.

Concerning the separation processes of reverse osmosis and ultrafiltration, it is difficult to describe an exact distinction except in terms of the operating pressures required for separation of the components of a given solution. Reverse osmosis membranes generally tend to be 'tight', i.e. they require high operating pressures (typically 600 to 1000 psi) to obtain good flux rates for water and high rejection of solutes. Ultrafiltration membranes, on the other hand, being 'loose' are characterised by low operating pressures (e.g. 10-50 psi), relatively high flux rates for water, low rejections for inorganics but high rejections for large molecules. Thus, organic/inorganic separations can be achieved in solution and fractionation of organics is possible, especially between species of widely different molecular weight. Important advantages of both these membrane separation processes are the low operating temperatures and low power or fuel costs, not attainable by thermal means.

Water-wet storage of cellulose acetate membranes is generally necessary, although a recent patent[14,15] describes a surfactant/freeze-drying pretreatment process, claimed to impart freedom from hydrolysis and microbial attack on prolonged dry-storage.

R.O. as a separation technique is applicable to a wide variety of purposes, some of which are indicated in Fig. 3.

---

* Gallons of product water permeating the membrane per sq.ft. of area per 24 hr. day.

No satisfactory method is available for accurately predicting the performance characteristics of a particular solution/membrane system. Nevertheless, a considerable quantity of laboratory-scale data has been published, confined mainly to relatively simple, batch-type studies, or to novel applications for membrane processes.

In a large-scale reverse osmosis water-treatment plant (as in Fig. 4) the osmotic modules themselves constitute only a part of the installation.

Buildings, storage tanks, pumps, pipes, power supplies, pretreatment facilities, controlling instrumentation, site preparation, etc. are all major items of expense. Of particular interest are the pretreatment facilities required. It is sometimes necessary to remove particulate matter from the feed to prevent erosion of the membrane, fouling of its surface, or blockage of the thin passageways, in some of the available systems.

In relation to the areas of application outlined above, the requirements for a successful osmotic module are specified in Fig. 5.

Over the past few years, several types of osmotic module have evolved that more or less meet these criteria. These can be classified under five broad categories (Fig. 6). The following comments will hopefully provide a fair appraisal of the relative merits of each under various operating conditions:-

1. Tubular Units

There are several design concepts of tubular modules on the market (Fig. 7). Their chief advantage over other systems is that they can handle liquids containing suspended particles or dissolved substances likely to precipitate out as the feed solution becomes more concentrated. In the tubular unit, provision is made for maintaining a good flushing action throughout the system during operation. As the solution becomes more concentrated, it is often possible to prevent fouling or plugging of the membrane simply by adjusting the proper hydrodynamic conditions - an easy operation in tubular systems, but hardly possible in others. Nevertheless, there are also some disadvantages:

(i) the large number of connectors with the resulting expense in making and assembling the array,
(ii) the small membrane surface area/unit volume ratio,
(iii) the necessity for enclosing the tube exteriors to protect the purity of the permeate,
and (iv) the expensiveness of the support media.

These points are summarized in Fig. 8.

2. Spiral-Wound Units

Developed by Gulf General Atomic Co. (Figs. 9 & 10), the spiral-wound unit consists of a 'sandwich' arrangement consisting of two layers of membrane, with a porous backing material at the centre, at one end of which is a perforated plastic pipe. The edges of the membrane are sealed, with the porous backing material inside the resulting envelope, which with suitable mesh spacers is rolled spirally around the central pipe. The whole is placed inside a cylindrical

pressure container, thus completing the modular unit. Typically, several modules can be placed in series. The feed liquid flows axially, and as water permeates the membrane it flows through the porous backing material to the central pipe which acts as collector for the product water. The concentrated solution continues to flow axially through the roll, emerging at the mesh spacer gaps at the other end.

A principal advantage of this design is that it has a high membrane surface area/unit volume ratio compared with the tubular configuration.

Disadvantages in comparison with tubular units are

(i) severe problems in handling high-solids feed,
(ii) short feed flow paths,
(iii) high pressure losses,
and (iv) difficulty in recirculating concentrate.

The above points are illustrated by Fig. 11.

3. Plate and Frame (R.O.) Units

The plate and frame concept (Fig. 12), the earliest design of R.O. unit, has an obvious similarity to the filter press, and provides a convenient solution to the pressure-containing problem.

A system of this type has been developed by Aerojet-General Corp. It is particularly attractive for small, low-pressure plants.

The membrane is supported on a flat circular plate, and plates are stacked on top of each other. Product water emerges at the edge of the plates in the smaller units: in the larger units (over 1000 gpd* capacity) product water is channelled to a central shaft. Feed and product liquid streams are kept separate by O-ring seals. Turbulent flow of the feed stream is induced by means of baffles located near the membrane surfaces.

The following disadvantages can be ascribed to the plate and frame design:

(i) expensive to install and maintain (labour costs),
(ii) distribution and short circuiting problems,
(iii) narrow flow channels,
(iv) multiple membrane handling, which increases the probability of failure,
(v) low surface area/unit volume ratio.

These points are summarized in Fig. 13. Notwithstanding these limitations, large numbers of complete units have been used for water purification on a scale up to 40,000 gpd.

4. Plate and Frame (Ultrafiltration) Units

Dorr-Oliver Inc. has developed a somewhat unique ultrafiltration module (Fig. 14), less costly and easier to maintain - as regards

* Gallons of permeate per day.

membrane replacement - than other devices now available. The membrane is supplied in the form of replaceable cartridges, which are inserted into a polyester/fibreglass moulded rectangular shell-and-cover arrangement. The unit has typical operating pressures of 10-50 psi. The Dorr-Oliver unit utilizes high flux, non-cellulosic anisotropic membranes, developed by the Amicon Corporation[16], and tailor-made for retention of large molecules and colloids. These membranes are well-suited to operation under more strongly acidic or alkaline conditions than the cellulosic membranes can withstand, and also at higher temperatures. Currently, this system is being developed for industrial and domestic waste water purification.

5. Hollow-Fibre Units

A somewhat novel approach to R.O. equipment is being pursued by the DuPont Co. and by Dow Chemical Co., who have pioneered the use of fine hollow fibres as osmotic membranes (Figs 15 & 16).

Modules based on this concept contain an astronomically large number of hollow filaments, ca. 50μ o.d and 25μ i.d., assembled into a cylindrical bundle, the open ends of which have been potted into a plug of resin serving as a header. This bundle is inserted into a cylindrical shell which serves as a pressure vessel. Pressurized liquid is pumped into the shell side of the assembly, permeate being collected from the ends of the hollow fibre bundle. These units contain an enormous membrane surface area/unit volume ratio, so that high intrinsic membrane permeabilities (in terms of gfd) are unimportant. Present systems are designed primarily for water demineralization. Dow's fibres are spun from cellulose acetate; DuPont's from nylon and other polymers.

Advantages of the hollow fibre configuration are

(i) enormous surface area/unit volume ratio,
and (ii) the hollow fibres withstand the high operating pressures required for R.O. and eliminate the need for space-consuming porous support media essential to other module designs.

The disadvantage of this configuration is that it is not applicable where an appreciable level of suspended solids is present in the feed solution. Filtration is necessary to prevent clogging of the fibre bundle.

Fig. 17 outlines these points briefly.

The DuPont hollow fibre unit, based on nylon fibres, is operational in the pH range 1.5-12.0, as compared with the recommended pH range 3-8 for modules utilizing cellulose acetate membranes.

Some typical characteristics of the various modular assemblies classified above are summarized in Fig. 18. At present, several manufacturers of R.O. systems market units of capacities up to 100,000 gpd. Plants of capacities 1 million gpd and into the multimillion gpd range are forecast for the not-too-distant future.

Criteria Governing Application of Reverse Osmosis

Reverse osmosis may be regarded as a technique for separating the components of a waste stream to attain any or all of the following goals:-

(i) reclamation of water for reuse,
(ii) concentration of constituents for reuse or convenient disposal,
(iii) abatement of pollution.

In this presentation, a fully-detailed discussion of all areas of application is not possible. Attention will therefore be directed toward defining the criteria that govern the general applicability of reverse osmosis. The relevant considerations can be divided conveniently into two categories:-

(1) Feed Solution Conditions (Fig. 19),
and (2) Chemical Engineering Parameters (Fig. 20).

The basic transport equations for Reverse Osmosis are shown in Fig. 21, where

J_1 = solvent flux rate
J_2 = solute permeation rate
ΔP = applied pressure differential across membrane
$\Delta \pi$ = osmotic pressure differential across membrane
and A and B are constants.
C_f = concentration of solute in feed solution
C_p = concentration of solute in permeate

These equations have their basis in the widely-held solution-diffusion model of membrane transport theory. The pore-flow model, which also has its strong proponents, leads to similar conclusions concerning transport behaviour, though both theories are found to contain a few anomalies when applied to practical situations.

Concentration Polarization

The phenomenon known as 'concentration polarization'[16,17] can, if unchecked, have an adverse effect on R.O. performance. For membranes with a high intrinsic flux rate for permeating water, there is a tendency toward build-up (by removal of water) of a concentrated layer of solution immediately adjacent to the membrane surface on the feed side. The effective osmotic pressure that has to be overcome by the applied pressure is that of the concentrated solution at the membrane surface. To eliminate this effect, turbulence (high Reynolds numbers) on the feed liquid side is required. Dispersal of the concentrated boundary layer then brings about an increase in flux rate and solute rejection efficiency. In some equipment, laminar flow in thin channels is used to eliminate this effect.

SELECTED AREAS OF INDUSTRIAL APPLICATION

The areas chosen to illustrate industrial waste-water treatment by R.O. are listed in Fig. 22.

1. Spent Liquors from the Pulping Industry

Published work[18] by the American Pulp Manufacturers Research League (Appleby, Wis.) supported (70%) by FWPCA Funds has demonstrated that the R.O. process is well-suited to the treatment of a variety of dilute pulp mill effluents, e.g. calcium base spent sulphite liquors, to produce colourless, foam-free waters of excellent quality. Yields of reusable water have been high (over 75%). An equally important advantage is that R.O. can be used to concentrate the dissolved substances economically to the point where they can be disposed of by conventional means, e.g. by evaporation and incineration. This programme has been active for over two years.

2. Acid Mine Drainage Waters

Acid mine waters are produced, e.g. by the flooding of disused workings where the ferrous sulphide in coal can be oxidized to ferrous sulphate and sulphur and ferric sulphate and sulphuric acid by bacterial action. These waters are harmful to fish and wildlife in general. On entering rivers and other water bodies, moreover, the pH rises and an ugly reddish precipitate of ferric hydroxide results. Field tests[19] conducted for over a year at Norton, West Va., by the OSW in co-operation with the FWPCA, have indicated that mine waters can be economically upgraded by R.O. for industrial and municipal use.

3. Petrochemical Complex Waste Waters

Raw petroleum complex waste waters are characterized by TDS levels comparable to brackish waters (ca. 5000 ppm TDS), but contain in addition a high level of oil contamination. Since the industry must treat its effluents for oil removal before discharge it can be assumed for purposes of cost estimates that the feed going to a R.O. plant will be oil-free. On this basis projected cost estimates have been prepared[19] for the treatment of petrochemical waste streams by R.O., at levels of 10 and 50 million gal/day. It has been predicted that product water costs of 35¢ and 25¢ per 1000 gallons respectively can be attained.

4. Electroplating Waste Streams

Many electroplating waste streams contain substances which, apart from being directly toxic to humans and wildlife, are poisonous to the bacteria that carry out the processing of organic wastes in municipal waste-water treatment plants. The American Electroplaters' Society have jointly supported research with the Ontario Research Foundation, at Sheridan Park, Ontario, into the potential application of reverse osmosis to plating waste treatment. Results of laboratory-scale experiments with nickel waste waters are considered most promising: recovery of nickel values and reusable water from these effluents by R.O. appears to be a very attractive proposition.. This work will be fully reported[20] at the AES Annual Convention, June 1970, at Montreal.

5. Cheese Whey Waste Streams

Principally a by-product of cheese manufacture, ca. 4 billion pounds of whey are produced in Canada and 22 billion pounds in the U.S.A. on an annual basis. The disposal of whey (which is perishable, with a high B.O.D.) has become a critical problem. Factories

that dump whey into sewage streams are now required to find other methods of disposal, pay sewer-use premiums or go out of business. Whey contains valuable nutrients including lactose, proteins, vitamins and minerals, potentially recoverable in solid form by evaporative drying. The cost of processing whey by thermal means alone is generally uneconomical, however, particularly for small volume plants.

The USDA have conducted reverse osmosis tests in this area[21] for about three years and demonstrated that 75-80% of the whey water can be economically removed at ordinary temperatures by R.O. This permits convenient shipment of the concentrate to large plants for drying. Apart from eliminating the disposal/pollution problem, reverse osmosis presents the further possibility of fractionating whey into its individual components. For example, lactose has uses in the pharmaceuticals industry, while lactic acid is a food-grade acidulant. R.O. fractionation also permits upgrading of the product to a protein : lactose ratio best suited for the intended use.

6. Corn Processing Effluents

Experimental studies at the Ontario Research Foundation[22] have demonstrated the technical and economic feasibility of applying R.O. to the treatment of corn process waste streams. Reclamation of excellent quality water (yield 90%) has been attained, with concomitant concentration of the dissolved proteins and carbohydrates into a form suitable for adaption to nutritional use. There is also a resultant reduction of the B.O.D. load on the final waste treatment facilities.

7. High-Salinity Irrigation Return Flows

Containing dissolved salts in the concentration range of the order of that of brackish water (5000 ppm), these waters are not suitable for agricultural reuse. The OSW and FWPCA have jointly supported, for over a year, reverse osmosis field tests at Fresno, Cal., aimed at multiple reuse of these flows. An economic evaluation of this application is in preparation[19].

8. Miscellaneous Applications to Industrial Waste Treatment

Some additional areas of application that can be considered pertinent to this review are

Secondary and Tertiary Sewage treatment,
Recovery of radioactive wastes,
Recovery of photographic processing wastes,
Water recovery from detergent-containing laundry waste waters,
Re-use of car-wash water as non-spotting rinse water.

CONCLUSIONS

Reverse osmosis offers promise in solving the problem of purifying waste waters economically in many areas of application. Principal advantages of the process are the low power or fuel costs. With the inevitable development of improved membranes and support

equipment, and the establishment of very large R.O. plant, future treatment costs are expected to be impressively reduced.

REFERENCES

1. Teorell, Proc. Soc. Exp. Biol. Med., 1935, 33, 282.
2. Sollner, J. Phys. Chem., 1945, 49, 47.
3. Reid and Breton, J. Appl. Polymer Sci., 1959, 1, 133.
4. Loeb and Sourirajan, USP 3,133,132/1964.
   USP 3,133,137/1964.
5. Dobry, Bull. Soc. Chim. France, 1936, 5e. Serie, III, 312.
6. Manjikian, Ind. Eng. Chem. (Prod. Res. & Dev.) 1967, 6, (1), 23.
7. Chem. & Eng. News, 1969, Feb. 3, 33.
8. Chem. Eng., 1969, Feb. 24, 60.
9. Riley, Gardner and Merten, Science, 1964, 143, 801.
10. Air Water Pollution Report, 1969, 7, (6), 48.
11. Riley et al, OSW Res. & Dev. Rept. No. 386, 1969
12. Proc. Conf. Membranes for Ind., Biol. and Waste Treatment Processes, held Oct. 20-21, 1969, Battelle Memorial Institute, Columbus, Ohio (in press).
13. Mahon, Proc. Desalination Res. Conf., Nat. Acad, Sci., 1961, (952).
14. Vos and Burris Jr., Ind. Eng. Chem. (Product R & D), 1969, 8, (1), 84.
15. Riley, USP 3,428,584/1969.
16. Michaels, Chem. Eng. Progr., 1968, 64, (12), 31.
17. Brian, Ind. Eng. Chem. (Fund), 1965, 4, (4), 441.
18. Wiley, Amerlaan and Dubey, Tappi, 1967, 50, (9), 455.
19. Channabasappa, Chem. Eng. Progr. Symp. Ser., 1969, 65, (97), 140.
20. Golomb, paper to be read at AES Convention, Montreal, June 1970.
21. Marshall, Dunkley and Lowe, Food Technol. 1968, 22, 969.
22. Besik, Water & Pollution Contr., 1969, (Oct.), 24. Ibid, (Nov.),47.

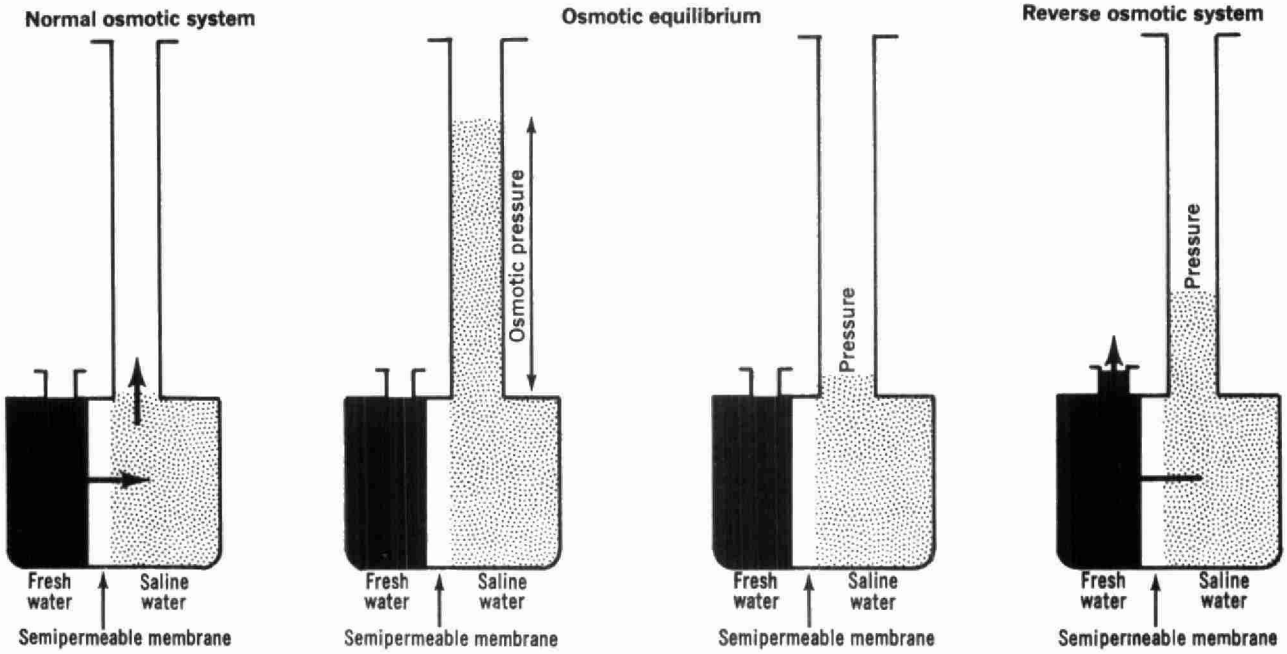

FIG. 1
Principle of Reverse Osmosis

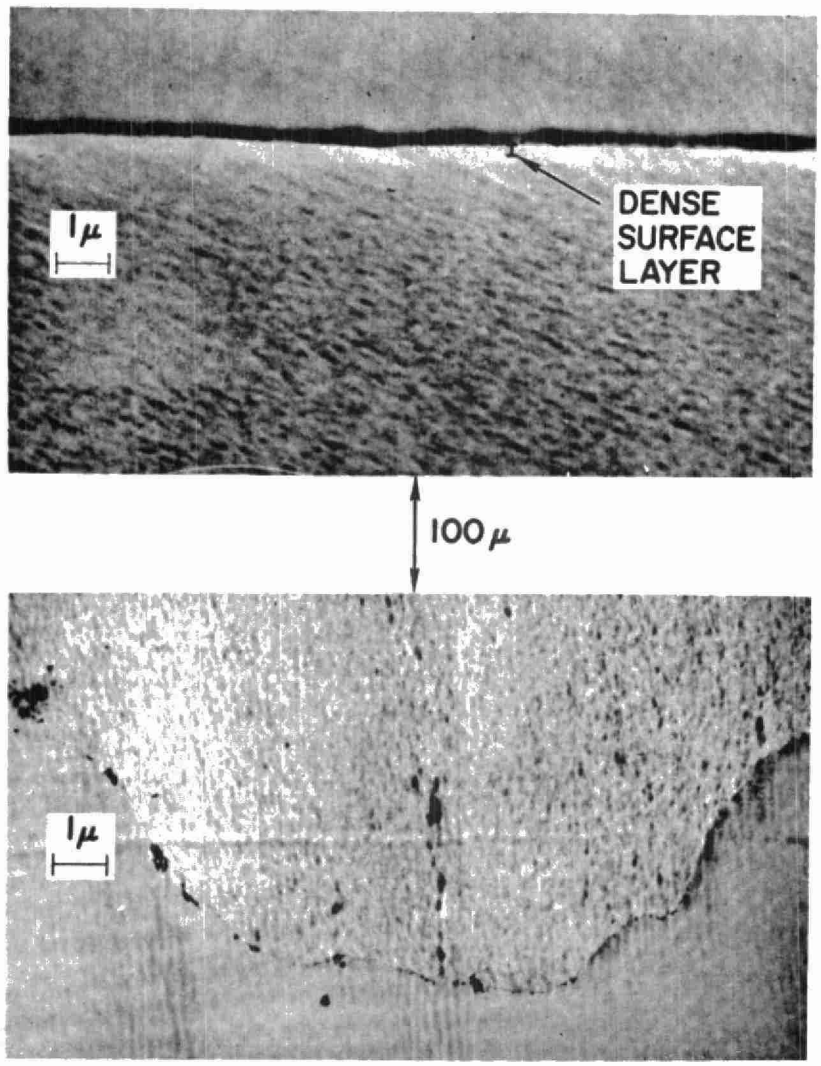

FIG. 2
Electron Photomicrograph of Loeb-Sourirajan Type of Cellulose Acetate Membrane

Reverse Osmosis: Some Areas of Application

1. Desalination of sea and brackish waters.
2. Concentration of sugar solutions, such as cane sugar, beet juice, maple syrup, and corn syrup,
3. Concentration of fruit juices (orange, apple, tomato),
4. Concentration of coffee and tea prior to freeze-drying,
5. Treatment of acid mine waters, which contain dilute H_2SO_4 and valuable minerals,
6. Concentration and fractionation of the components of cheese whey,
7. Concentration of pulpmill effluents, for incineration,
8. Domestic waste water: tertiary treatment,
9. Recovery of protein and carbohydrates from starch wash waters,
10. Treatment of electroplating waste waters for recovery and reuse of chemicals and water,
11. Concentration of pharmaceuticals in aqueous media.
12. Petrochemical & petroleum separation processes.

FIG. 3

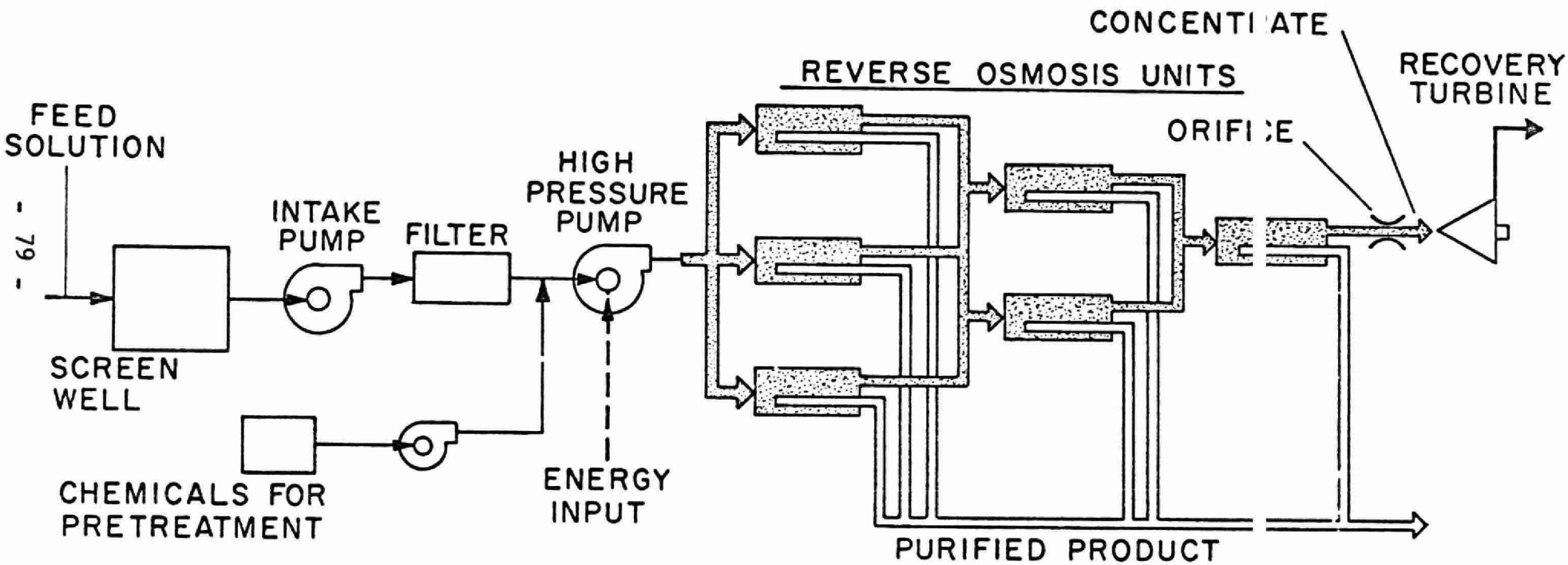

FIG. 4

Schematic of Reverse Osmosis Water Treatment Plant

Requirements for a Successful Osmotic Module

It must (1) provide proper mechanical support for the membrane,

(2) provide for uniform distribution of the process solution over the entire membrane surface,

(3) provide adequate hydrodynamic conditions for the process solution and permeate with minimum loss of energy,

(4) have a high active membrane area/volume ratio,

(5) be simple and easy to dismantle and clean out,

(6) allow for easy membrane replacement and reassembly,

(7) be highly reliable and operationally safe, since it operates under pressure,

(8) be as free as possible from leakages that could result from pressure-induced changes in dimensional tolerances,

and (9) be inexpensive to fabricate, repair and maintain.

FIG. 5

Broad Classification of Osmotic Modules

(1) Tubular units

(2) Spiral wound units

(3) Plate and frame (R.O.) units

(4) Plate and frame (ultrafiltration) units

(5) Hollow fibre units

FIG. 6

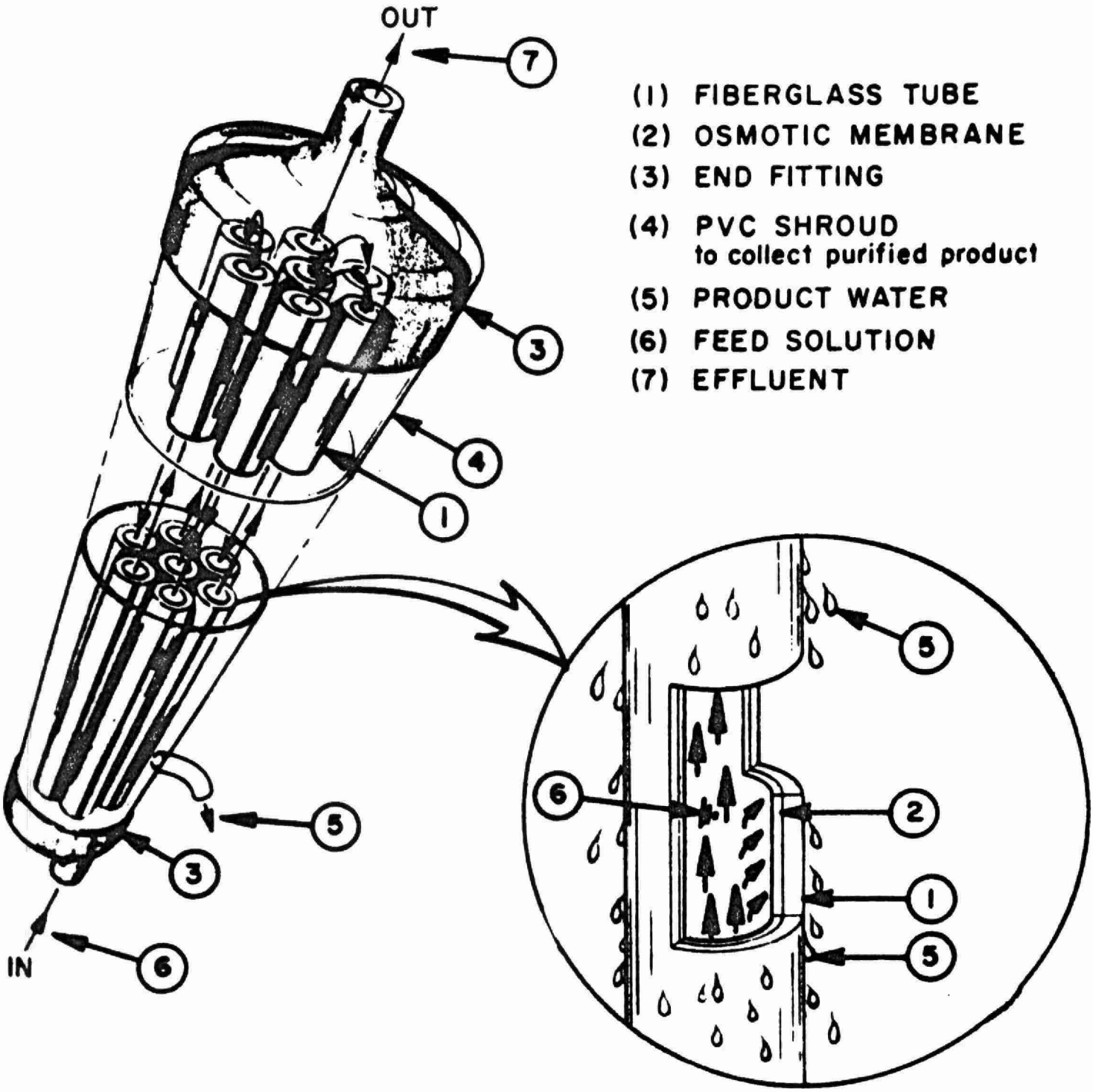

FIG. 7

Tubular Modules: Design Concept

Advantages: (1) Can handle solutions with suspended solids

(2) Proper hydrodynamic conditions to eliminate concentration polarization, fouling, etc. can be adjusted easily.

Disadvantages: (1) Large number of end fittings: costly to make and assemble array

(2) Small membrane surface area per unit volume

(3) Tube exteriors must be kept enclosed

(4) Expensive support media.

FIG. 8

Tubular Modules: Advantages and Disadvantages

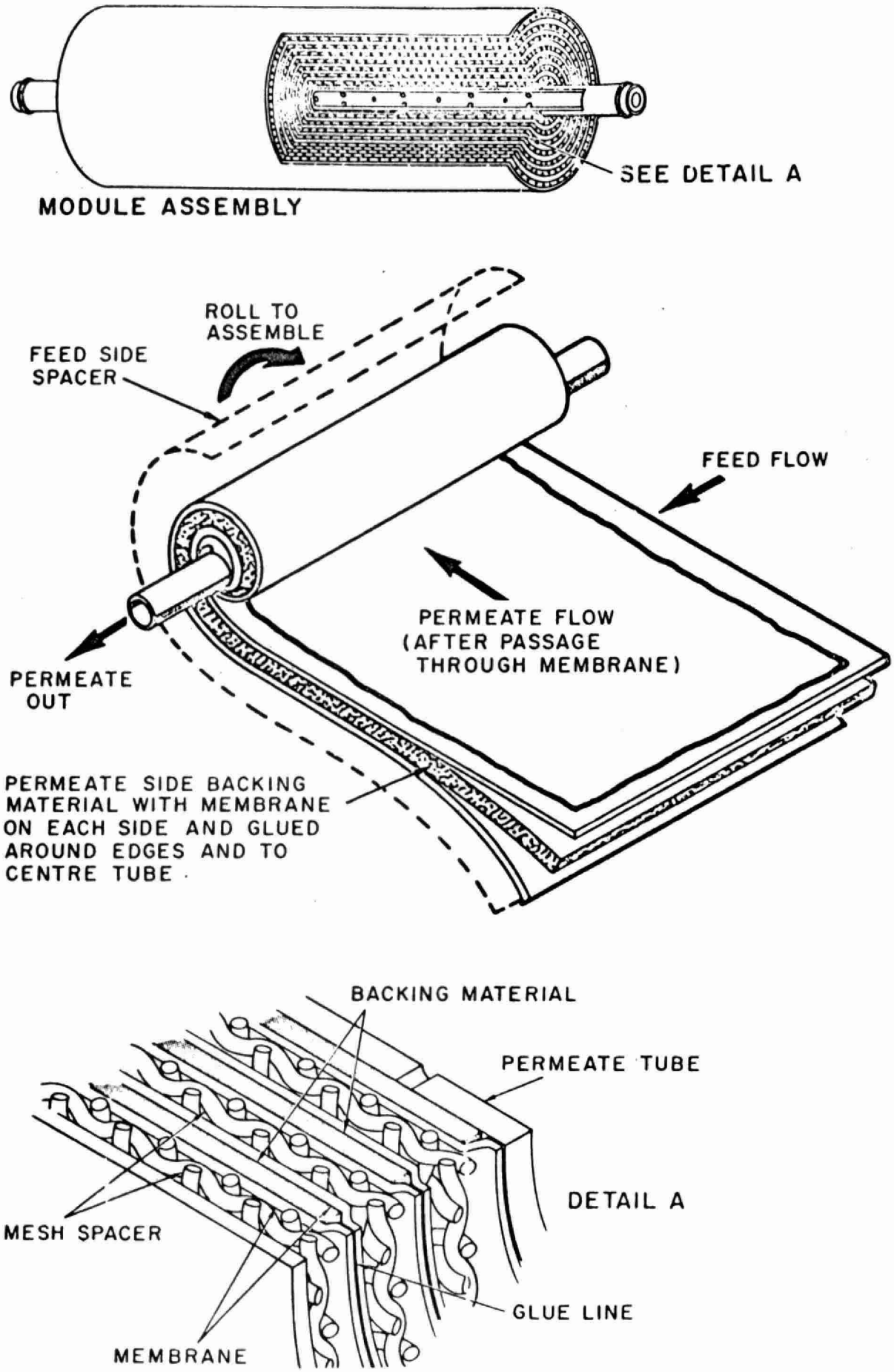

FIG. 9

Spiral Wound Modules: Design Concept

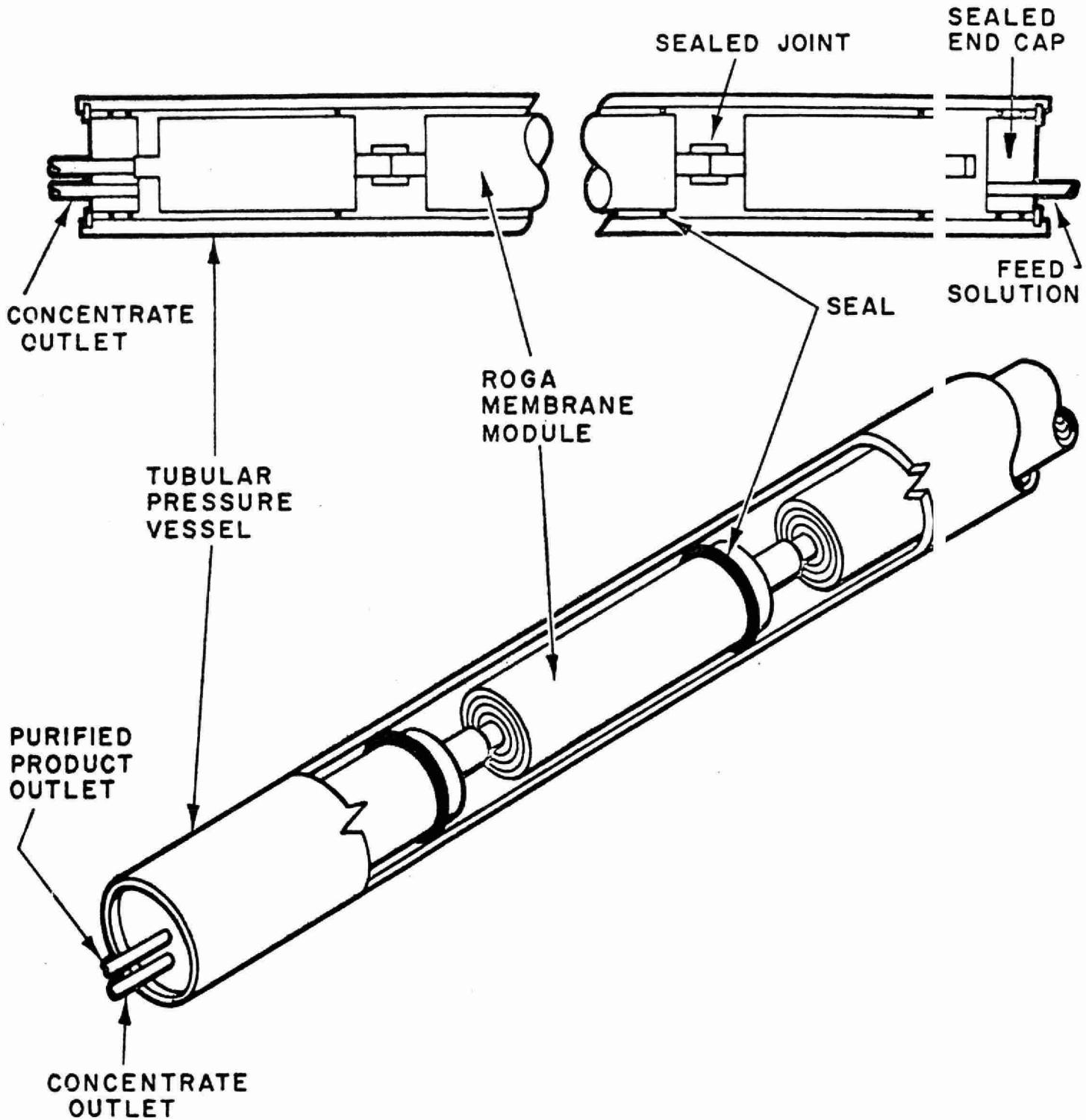

FIG.10 Spiral Wound Module : Design Concept

Advantage:	(1)	High membrane surface area per unit volume
Disadvantages:	(1)	Problems with feed containing suspended solids
	(2)	Short feed flow paths
	(3)	High pressure losses
	(4)	Difficulty in recirculating concentrate

FIG. 11

Spiral Sound Modules: Advantages and Disadvantages

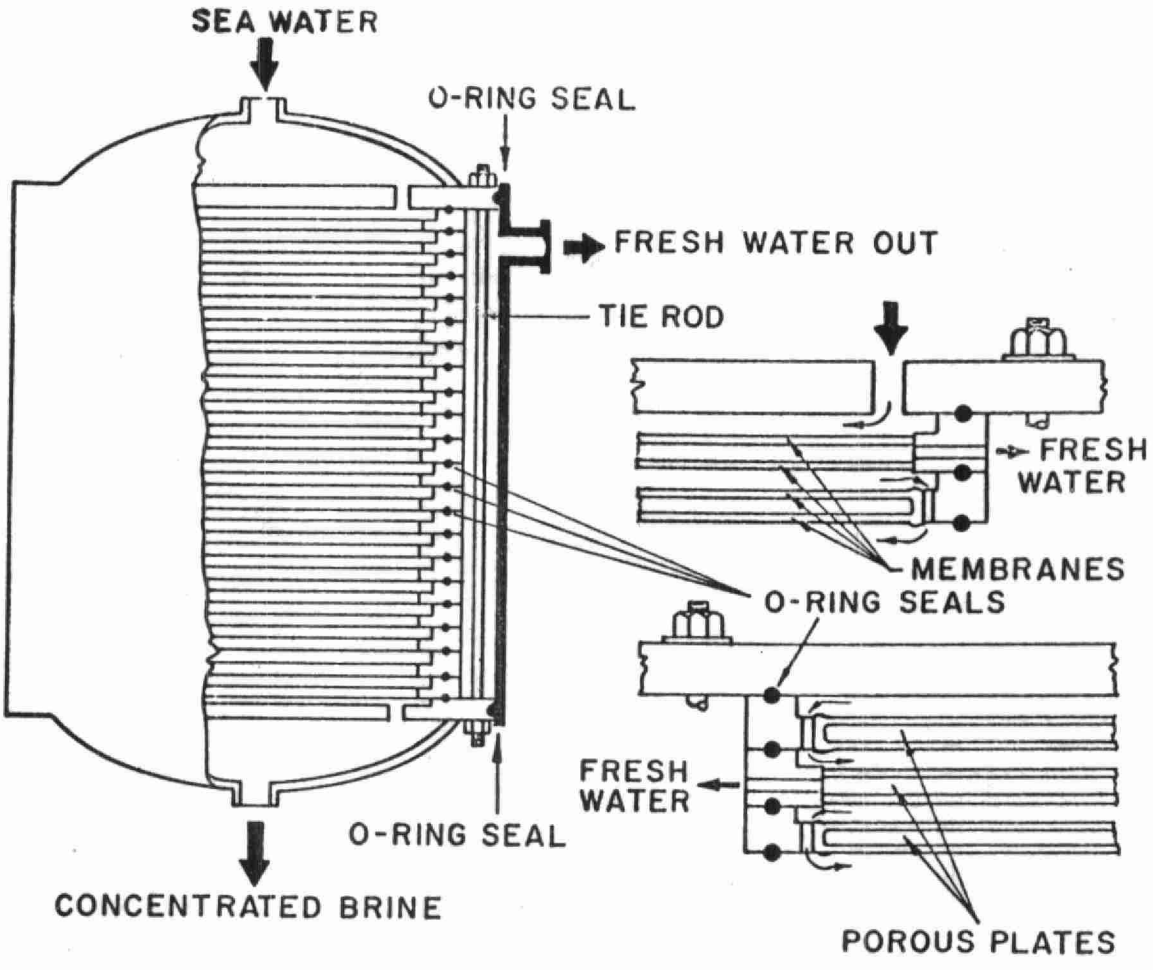

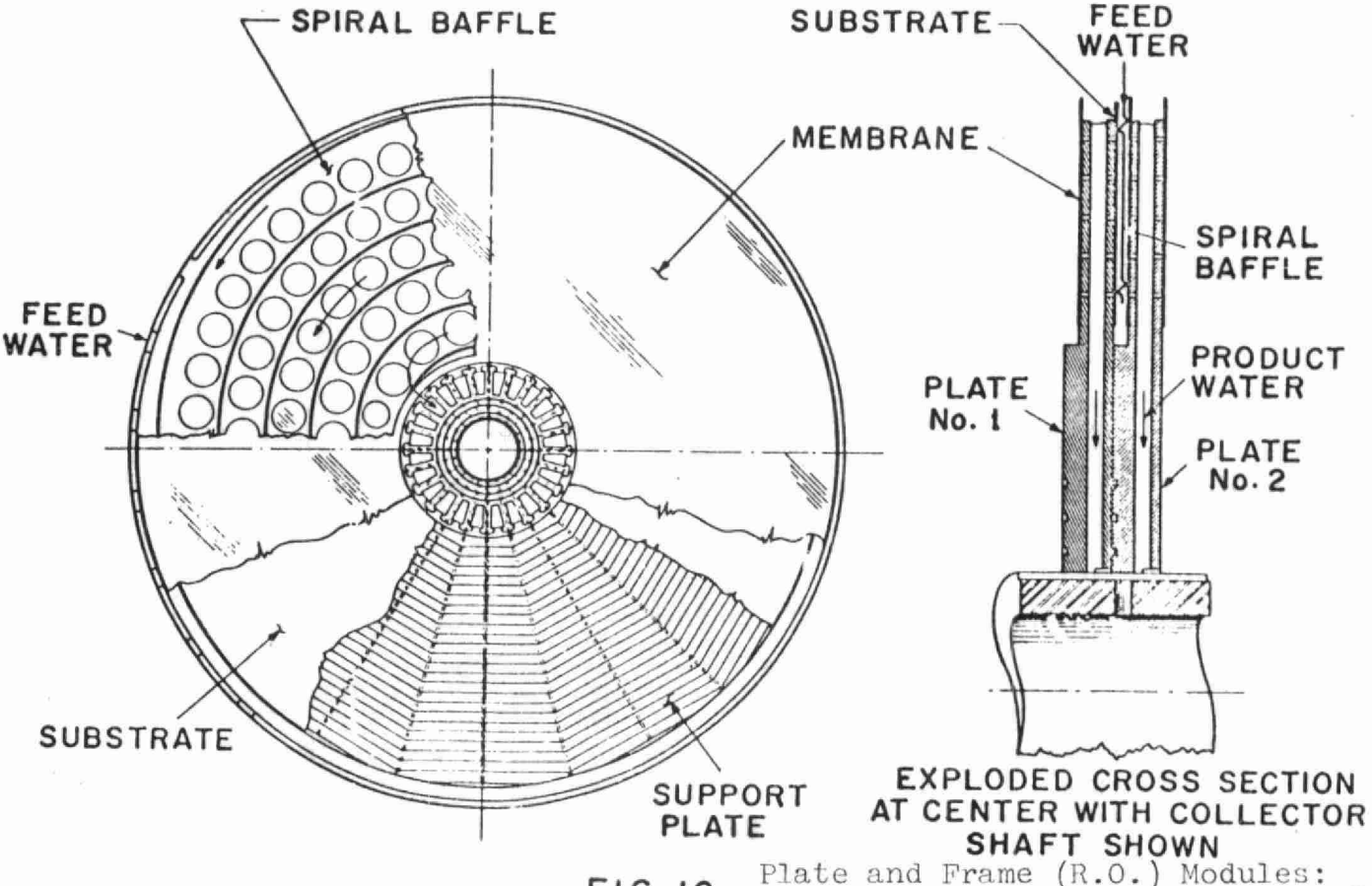

FIG. 12 Plate and Frame (R.O.) Modules: Design Concept

Disadvantages: (1) Expensive to install and maintain (High costs of labour and hardware)

(2) Feed distribution problems

(3) Narrow flow channels

(4) Complexity of multiple membrane handling

(5) Low membrane surface area per unit volume.

FIG. 13

Plate and Frame Modules: Disadvantages

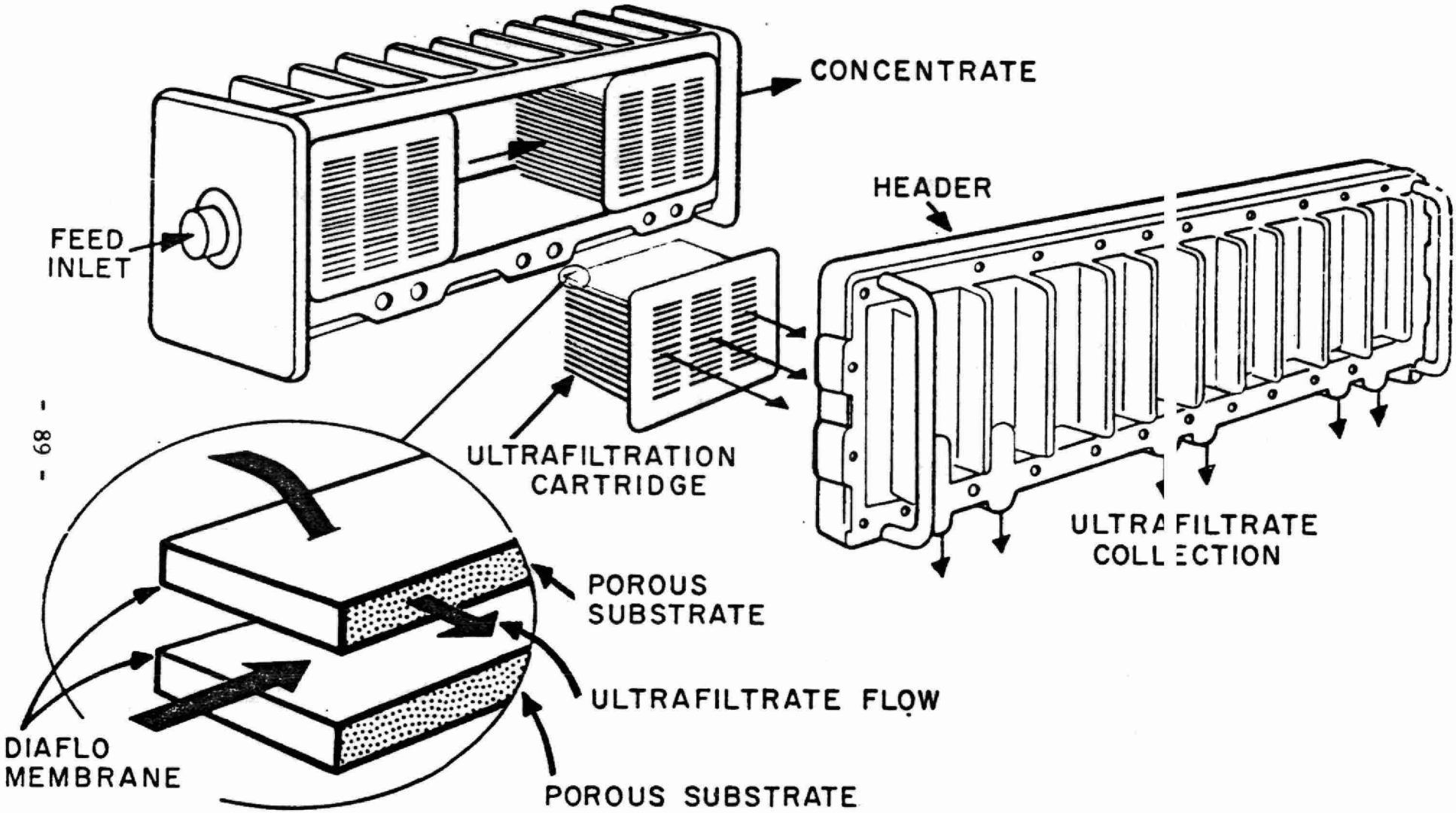

FIG.14

Plate and Frame (Ultrafiltration) Modules: Design Concept

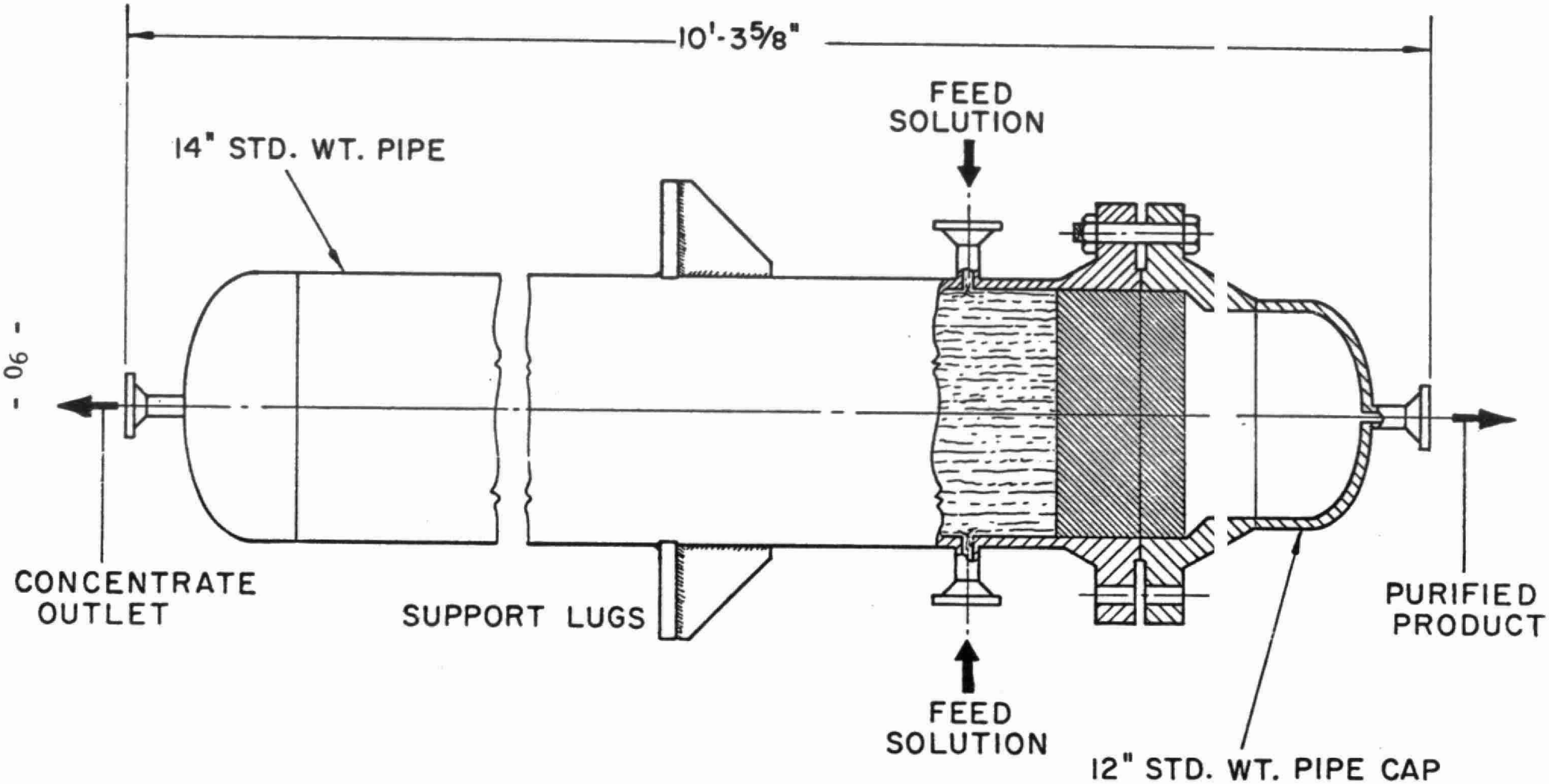

FIG. 15

Hollow Fibre Modules: Design Concept

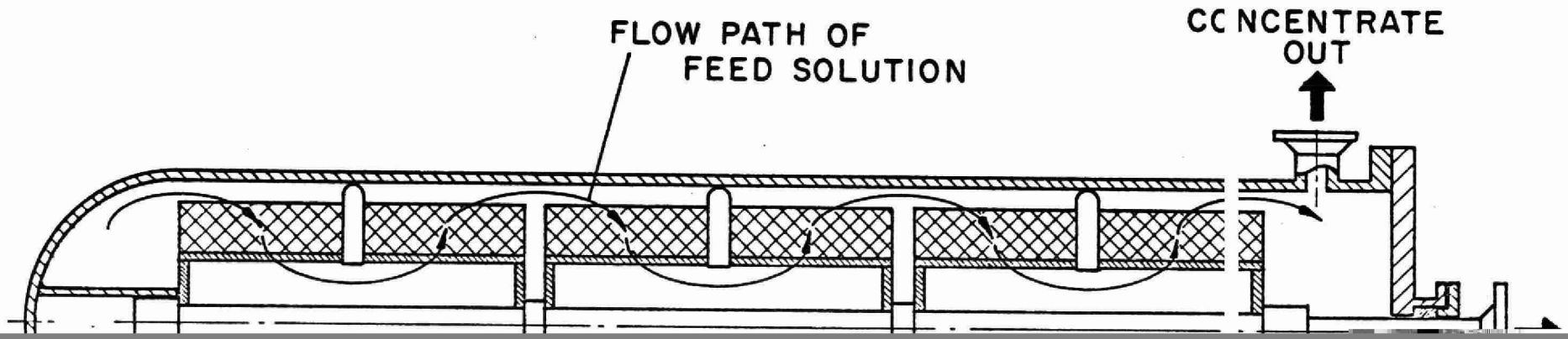
FLOW PATH OF
FEED SOLUTION
CC NCENTRATE
OUT

Advantages:	(1)	High membrane surface area per unit volume
	(2)	Membrane support not required
Disadvantage:	(1)	Cannot handle feeds containing suspended solids.

FIG.17

Hollow Fibre Modules: Advantages and Disadvantages

Summary of Characteristics of R.O. Modular Assemblies

Type of R.O. Module	Active Membrane Area Per Unit Volume (ft^2/ft^3)	Typical Range of Flux Rates (gfd)
Tubular unit	5 - 100	3 - 50
Spiral-wound; plate & frame	100 - 1,000	3 - 50
Hollow fibre	1,000 - 12,000	0.05 - 0.5

FIG. 18

CRITERIA GOVERNING TREATMENT BY REVERSE OSMOSIS

1. Feed Solution Conditions

COMPOSITION	CONCENTRATION OF SOLUTE(S) MICRO-ORGANISMS PRESENT (e.g. cellulolytic) SUSPENDED SOLIDS (particle size and consistency) CHEMICAL REACTIVITY (esp. toward membrane material)
TEMPERATURE	
pH	
OSMOTIC PRESSURE	(function of concentration & mol.wt. of dissolved species)
VISCOSITY	(related to composition)
PHYSICAL & CHEMICAL PRETREATMENT	(e.g. filtration, pH adjustment, etc.)

FIG. 19

CRITERIA GOVERNING TREATMENT BY REVERSE OSMOSIS (continued)

2. Chemical Engineering Parameters

PRODUCTION CAPACITY OF UNIT	(often expressed in gpd, or gal/day of permeate)
FLUX RATE FOR SOLVENT	(expressed as gfd, or gal/day x ft^2)
DEGREE OF SEPARATION ATTAINED	(related to %age rejection for each component)
APPLIED PRESSURE	(expressed usually as.psig)
FLOW VELOCITY ON HIGH PRESSURE SIDE	(expressed in terms of Reynolds No.)
COST	(includes capital depreciation, membrane replacement, energy requirements, etc.)

FIG. 20

Basic Transport Equations for Reverse Osmosis

For solvent $J_1 = A(\Delta P - \Delta\pi)$ ...(1)

For solute $J_2 = B\ \Delta C$ .....(2)

$$\text{For solute, \% Rejection} = \left(\frac{C_f - C_p}{C_f}\right) \times 100$$

$$= \left(1 - \frac{C_p}{C_f}\right) \times 100$$

FIG. 21

Selected Areas of Industrial Waste Water Treatment by Reverse Osmosis

1. Spent liquors from the pulping industry
2. Acid mine drainage waters
3. Petrochemical complex waste waters
4. Electroplating waste streams
5. Cheese whey waste streams
6. Corn processing effluents
7. High salinity irrigation return flows.

FIG. 22

C. D. LOGAN

"A NOVEL ION EXCHANGE PROCESS FOR CHEMICAL RECOVERY AND POLLUTION ABATEMENT"

BY

D. CRAIG, RESEARCH DIRECTOR

C. D. LOGAN, ASSISTANT DIRECTOR, CHEMICAL RESEARCH

THE ONTARIO PAPER COMPANY LIMITED, THOROLD, ONTARIO.

Introduction

The Ontario Paper Company Limited pollution abatement program goes back to 1935 when our Research Department was established. At that time one of its prime objectives was stipulated as that of reducing pollution and waste by fostering development of profitable new by-products from our effluent. In 1943 our plant to produce ethyl alcohol from spent sulphite liquor was put on stream. This process, an adaptation of previous European practice, was the first commercially successful alcohol plant on S.S.L. in North America. It is still in operation, removing in excess of 25 tons per day of fermentable sugars from our effluent with corresponding reduction in B.O.D.

Major research begun in the early 1940's led to the start-up in 1952 of vanillin production, an operation which consumed lignin and further reduced the carbohydrates in our effluent liquor. Our process was modified and expanded in 1958 effecting further removal of dissolved organics. Since then the use of spent liquor in the vanillin operation has increased with increasing production.

We are now well advanced in a three-phase program for major reduction in suspended solids and dissolved solids in our effluent. This program is in accord with O.W.R.C. requirements and has their approval.

As the first phase, a 150" diameter settler was installed in 1969 at a cost of $ 700,000 and is currently removing in excess of 11 tons per day of suspended solids. In the second phase, an ion exchange process, described here in detail, is scheduled for start-up in late 1970 at a cost of $ 1.7 million. The third phase will consist of evaporation and burning the effluents from our pulping and by-products operations, and is expected to be in operation in early 1972, contingent on equipment deliveries. Preliminary engineering of this evaporation and burning phase has been completed and detailed design and specification preparation is now well underway. In order to accelerate installation, equipment is being ordered before final design is complete. This third phase installation, comprising modern waste liquor collection, site preparation, services, and the additional steam generating capacity required for evaporation, will cost close to $ 6 million. The total cost of our current three-phase pollution abatement program is estimated at $ 8.6 million.

Ion Exchange Process

Ion exchange processes, e.g. Abiperm[1] and Pritchard-Fraxon[2], have been developed to recover either sodium, ammonium or magnesium ion from spent liquor and return the particular cation to the pulping cycle without prior evaporation and burning. In both cases strong sulphonated cation exchange resins are required. These resins are suitable for splitting lignin sulphonate salts but, unfortunately, are not readily regenerated to their acid form with sulphurous or other weak acids. In one case high concentrations of about 20% SO_2 are required and in the other acetone must be used to form a strong acidic addition compound with SO_2 for regeneration. These processes suffer from the additional drawback that the deionized waste liquor is extremely corrosive; even 316 ELC stainless steel cannot resist the corrosion, and an exotic metal such as tantalum is needed for evaporation.

At Thorold, acid sodium bisulphite is used for pulping. The approximate composition of the cooking liquor to digesters is 7.1% total SO_2, 1.1% combined SO_2, and 4.9% true free SO_2. This is prepared by diluting purchased 50% caustic to about 2% concentration and gassing with SO_2 in an absorption tower followed by fortification under pressure with pulping digester off gases. After completion of the cook the pulp is blown, drained, and displacement washed to recover spent liquor. Dilution in recovery is about 10%. This spent liquor is fermented to produce 1,000,000 Imp. Gal./year of 95% ethyl alcohol from the fermentable sugars.

The wort is then subjected to a patented[3] pressure alkaline hydrolysis-air oxidation reaction to produce vanillin (3-methoxy, 4-hydroxy benzaldehyde). The reaction must be run with a substantial excess of caustic for maximum production. In our process this excess caustic must be neutralized (with sulphuric acid) to permit extraction of the vanillin from the aqueous phase with toluene.

A unique opportunity existed here to recover all or part of the excess caustic in the vanillin process liquors by ion exchange as a substitute for the purchased caustic used in the pulping operation and to reduce, by a stoichiometrically equivalent amount, the sulphuric acid needed for neutralization. In contrast to other ion exchange schemes, in this specific case we have found it possible to employ weak acid cation exchange resins that have a high affinity for hydrogen ion and can be easily regenerated to their acid form with sulphurous or other weak acids. These types of resins have high capacity for cations such as sodium but only at high pH. This explains why they are effective for sodium recovery from the alkaline vanillin liquor and why the sodium can be readily recovered in high concentration suitable for sulphite cooking liquor with sulphurous acid.

The patented process[4] was initially worked out on a laboratory scale, and subsequently piloted on a 2 ft. diameter, 16 ft. high, completely automatic column. The full-scale plant is presently under construction.

Figure 1 indicates diagrammatically the various steps of the process.

STEP A - Absorption

Alkaline vanillin process liquor is passed upward through an ion exchange bed of Amberlite IRC-50 (Rohm & Haas) in its free hydrogen form at a sufficient rate to fluidize the resin bed. Sodium is absorbed, converting the resin to its sodium form and simultaneously lowering the pH of the liquor. Degraded lignin present in the vanillin process liquor will precipitate if the pH falls below 7.0. Upward feed prevents localized low pH with resultant precipitation and plugging of the resin bed. Upward flow also sweeps out any carbon dioxide gas evolved during the absorption; in a downward flow column evolved gas would be trapped and interfere with the liquor flow. A further advantage is that the resin bed is reclassified each cycle so that it is not necessary to backwash the column to maintain good flow characteristics and remove any foreign material filtered out by the resin. This mode of operation also obviates problems that can occur due to the increase in resin volume when changing from the hydrogen to the sodium form. This increase can vary from 50% to 100% depending upon the pH of the liquor.

Since total exchange capacity of the resin is favoured by high pH values, the highly alkaline vanillin liquors containing 25 to 30 g.p.l. free caustic substantially utilize all the carboxylic groups of the resin.

The limitation imposed on sodium recovery is the minimum pH to which the liquor can be reduced before lignin precipitation occurs. Acid requirement in the vanillin process can be reduced as much as 87%; however in practice the reduction is less since the sodium recovery must be restricted to our pulp mill sodium requirements.

STEP B - Water Washing

At the completion of the absorption step the liquor is drained from the column under air pressure down to the level of the settled resin, the residual liquor is displaced, and the resin subsequently washed free of liquor with water.

STEP C - Regeneration

A solution of sodium bisulphite and sulphurous acid is pumped downward through the bed to elute the sodium ion and to place the resin back into its hydrogen form. During the regeneration the resin contracts to about two-thirds of its expanded volume. The initial regenerant effluent from the column contains sodium predominantly as sodium sulphite; as the regeneration proceeds the proportion of bisulphite in the effluent increases, and finally the composition approaches the feed liquor. Small amounts of divalent ions such as calcium in the alkaline liquor are absorbed but these are also stripped off with sulphurous acid. By controlling the concentration of regenerant so that the overall pH of the regenerant effluent is in excess of pH 5.0, the divalent ions will precipitate as sulphite and can be separated by filtration from the soluble sodium salts.

STEP D - Water Washing

At the end of the regeneration step the regenerant remaining in the column is drawn down to within a few inches of the reduced resin bed under level control after which water is introduced to displace the regenerant. The resin is then in a suitable form for reuse in Step A.

Integration of Vanillin Plant and
Sulphite Mill with Ion Exchange

It will be apparent that two critical non-interruptible processes are being combined with a recovery system and it is essential that the three operations be integrated in such a manner that no interference occurs. The sulphite system and vanillin plant must be capable of being swung onto or off ion exchange with a minimum of operational change. The integration scheme as illustrated in Figure 2 meets these requirements.

Starting with the sulphite system on the right of Figure 2, the bisulphite storage tank is the focal point of the operation. It acts as a reserve storage tank for 15% sodium bisulphite solution to supply both acid regenerant for the ion exchange and liquor for preparation of sulphite pulp cooking acid. Regenerant acid is prepared by absorbing SO_2 in the bisulphite liquor to a pH of about 2.0 in absorption tower No. 1. From the storage tank the regenerant passes through the ion exchange system to pick up sodium ions and discharges at about an average pH of 5.0 to the sulphite precipitation tank. Any divalent ions precipitate as sulphite and are removed by filtration prior to storage in the bisulphite tank.

The liquor withdrawn to the No. 2 absorption tower is diluted appropriately and gassed with SO_2 to the desired concentration for cooking acid. When the system is in balance the volume of bisulphite liquor withdrawn will equal the dilution resulting from the water washing in the ion exchange process.

If, for any reason, the ion exchange is not in operation the bisulphite liquor will continue circulating but the flow from the regenerant storage will be bypassed directly to the sulphite precipitation tank as per the dotted lines. Caustic make-up solution equivalent to the caustic recovered from the ion exchange, i.e. that required for pulping operation, will be added to the sulphite precipitation tank thus maintaining flows and concentrations unchanged and in balance.

The alkaline liquor (note on left of Figure 2) is drawn from the vanillin operation, passes through ion exchange system, and returns to vanillin operation slightly diluted and depleted in caustic. When the ion exchange is not in operation the liquor is diverted directly back to the vanillin plant and bypasses the ion exchange system.

Equipment for Commercial Operation

The completely automatic ion exchange system has been designed and supplied by Himsley Engineering Ltd., Toronto, Ontario.

Their engineers worked closely with us in the design and development of the pilot plant. The operational experience of that plant together with their experience obtained in the design and operation of large complex automatic ion exchange systems elsewhere has proven of great assistance in the upscaling of the pilot work to the commercial unit.

The commercial system comprises three 10 ft. diameter by 16 ft. high 316 stainless steel columns each containing a 50" bed of Amberlite IRC-50 resin. Each column goes through the same sequence of operation but the cycles are staggered.

The system is in effect continuous in that there is a continuous flow of both alkaline liquor and regenerant to and away from one of the three columns. The acid and alkali pumps are running constantly and switch in sequence from one column to the next. A typical programme for the three columns is indicated in Figure 3.

It is estimated that with a maximum of 36 complete cycles per day (12 per column) the system can recover up to 30 tons/day of equivalent sodium hydroxide. In actual practice the recovery will be balanced against sulphite cooking acid demand. Sufficient capacity has been designed into the system to accommodate possible future expanded pulp production and/or improved pulping techniques which might have higher chemical demand.

There are some fifty or so automatic valves in the system which are operated by an electro-pneumatic controller which incorporates all the logic and degree of flexibility necessary to program the complete ion exchange process.

Because of the problems that could be created if the liquors mixed, there is an alarm system to indicate to the operator if any valve is in the wrong position for any particular step.

Should such an event happen due to some electrical failure (e.g. a solenoid coil burning out), a red lamp glows adjacent to the particular pneumatic manual over-rider which must be operated to place the valve in the correct position.

Visual and audible alarms are also provided to alert the operator of any unusual operating pattern, e.g. flow stoppage or air failure.

As the sulphite cooking acid demand determines the amount of sodium recovery required, it is necessary to have a convenient means by which the number of cycles per day can be changed. Such a change is effected merely by adjusting one control knob which, through the logic circuitry, automatically adjusts the sequence control of all three columns to meet the new conditions.

Should it be necessary to operate with only two columns for any reason then this may be done by isolating one column by means of a switch and the two remaining columns automatically fall into the correct sequence. In such a condition the acid pump would run continuously but there would be an automatically controlled "off" period for the alkali pump during which time the alkaline feed would be automatically bypassed around the ion exchange columns.

The control panel is provided with a stage indicator which will show the operator which step each column is in. All timers and pumps are provided with lights to indicate when each is in operation. Each of the individual steps can be readily adjusted and any column can, if required, be manually placed in the next step of the cycle by a push button, thus providing the maximum degree of flexibility.

Effect of Ion Exchange on Stream Pollution

The combined effluent presently discharged from our vanillin and pulping operations contains 50% of the dissolved solids as organics and the remainder as sodium sulphate. The ion exchange step will remove 40 tons per day of sodium sulphate. We have a modification of our pulping operations under study. If this is introduced, more sodium will be required in pulping and will be recovered via ion exchange. Additional capacity for this eventuality has been designed into our system which therefore may ultimately remove up to 60 - 65 tons per day sodium sulphate from the effluent. The organic content of the dissolved solids will increase to 65 - 75%.

The removal of sodium sulphate will permit evaporation of our effluent to a higher solids content, increasing the net heat value of the solids. Self-sustained burning will become possible and the incinerated ash load will be substantially reduced.

A prime guideline for reduction of industrial pollution must be reached, requiring performance at lowest cost in order to alleviate heavy capital and operating burden. Our ion exchange process is unique in that it not only contributes to pollution abatement but is profitable. It will not however, by any means, render our combined three-phase program of (1) suspended solids treatment, (2) ion exchange, and (3) evaporation and burning, profitable. It will, however, have a beneficial effect in reducing the total annual cost burden.

References

1. Holder, D. A., Mindler, A. B., Manchester, D. F., Proc. Tech. Sect. CPPA 1966, T55 - T64.

2. Wilson, W. J., Proc. Tech. Sect. CPPA 1966, D98 - D100.

3. Our vanillin production has included operations under one or more of the following patents:

Marshall & Sankey,	Can.	Pat.	482,191	- April 1, 1952
Fisher & Marshall,	"	"	483,827	- June 3, 1952
Fisher & Marshall,	"	"	483,828	- June 3, 1952
Fisher & Sankey,	"	"	483,829	- June 3, 1952
Craig & Logan,	"	"	615,553	- February 28, 1961

4. Logan, C. D., Can. Pat. 697,586 - November 10, 1964.

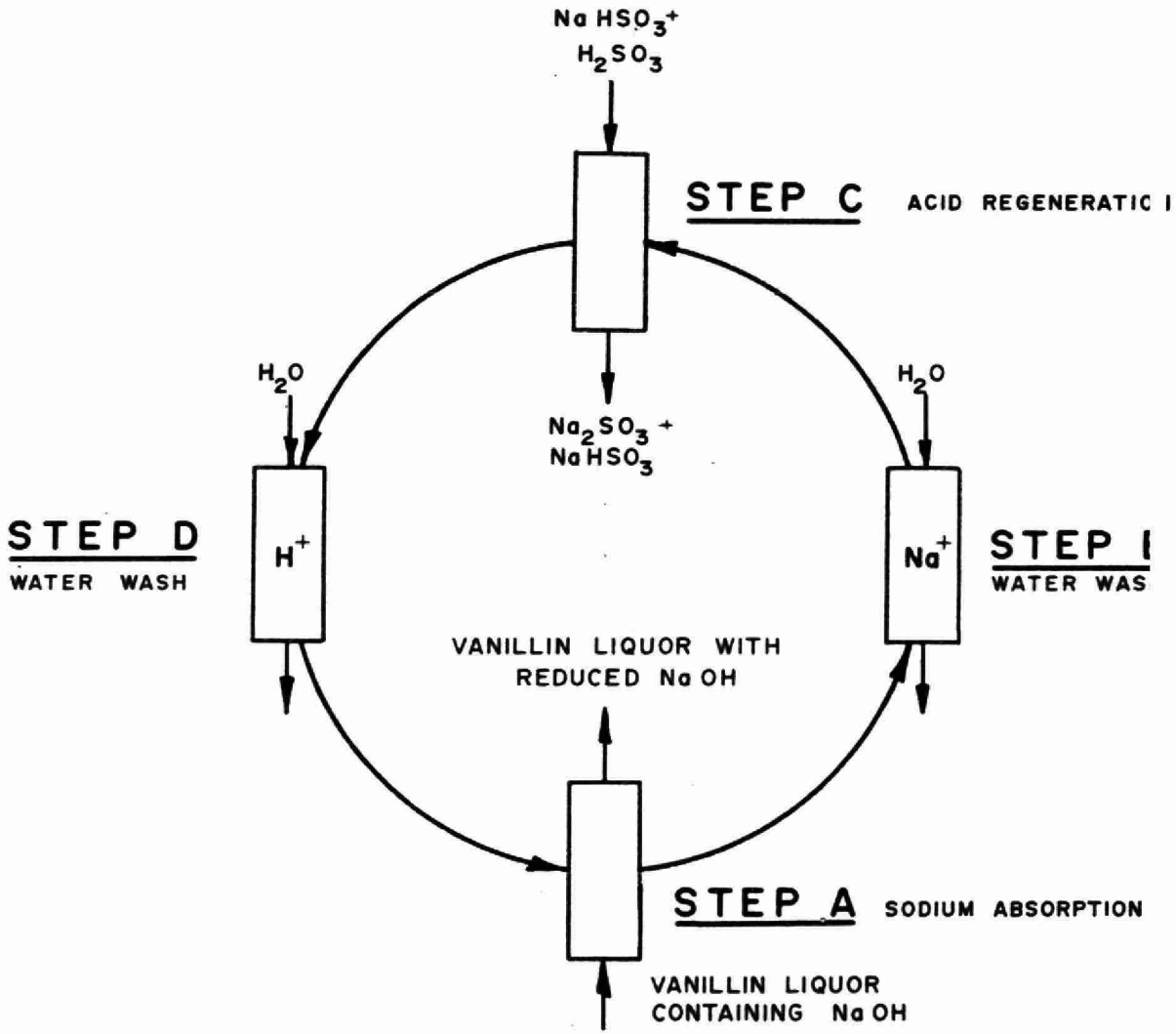

FIGURE I ION EXCHANGE PROCESS

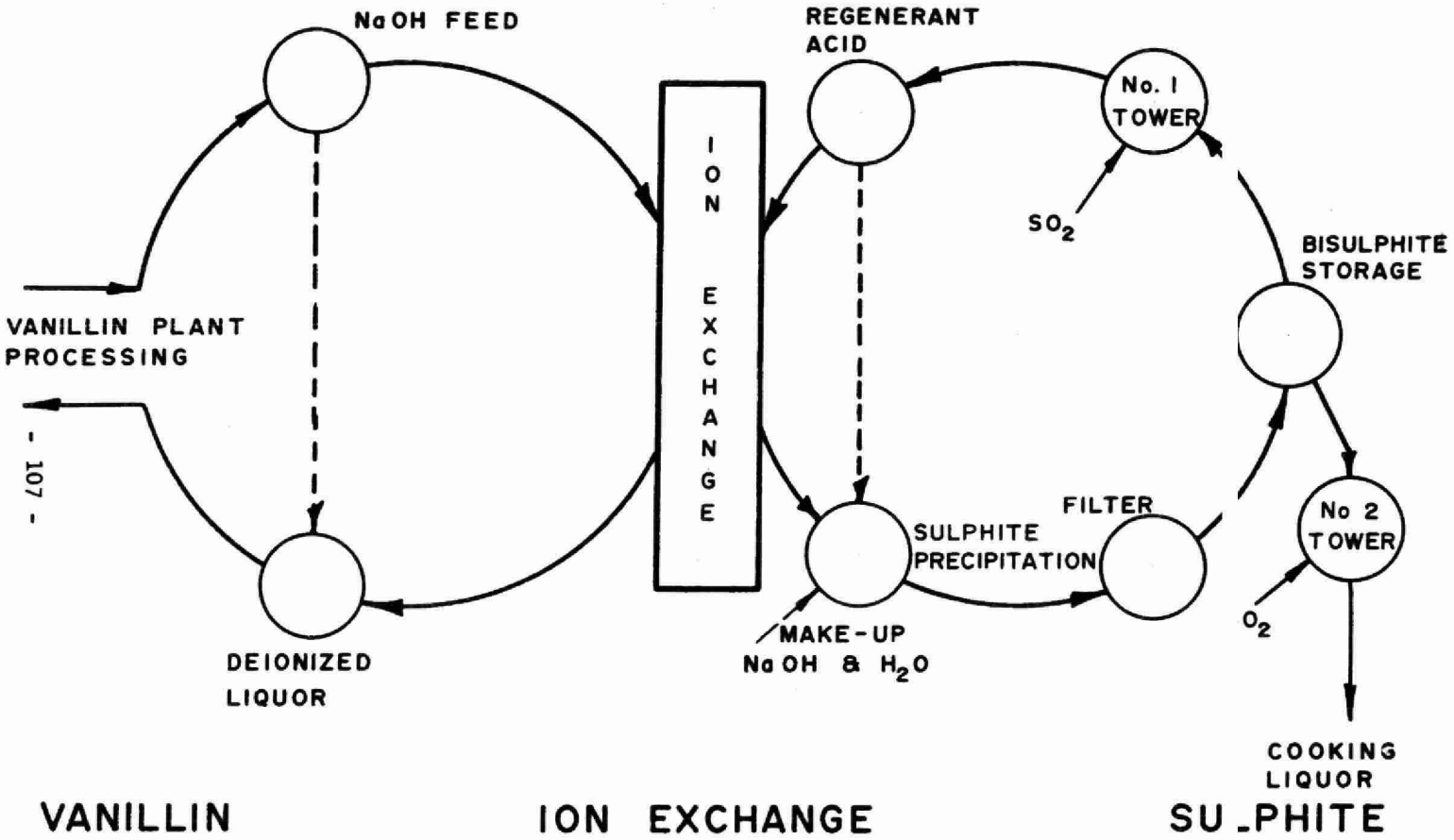

FIGURE 2 INTEGRATION OF ION EXCHANGE WITH VANILLIN & SULPHITE OPERATION

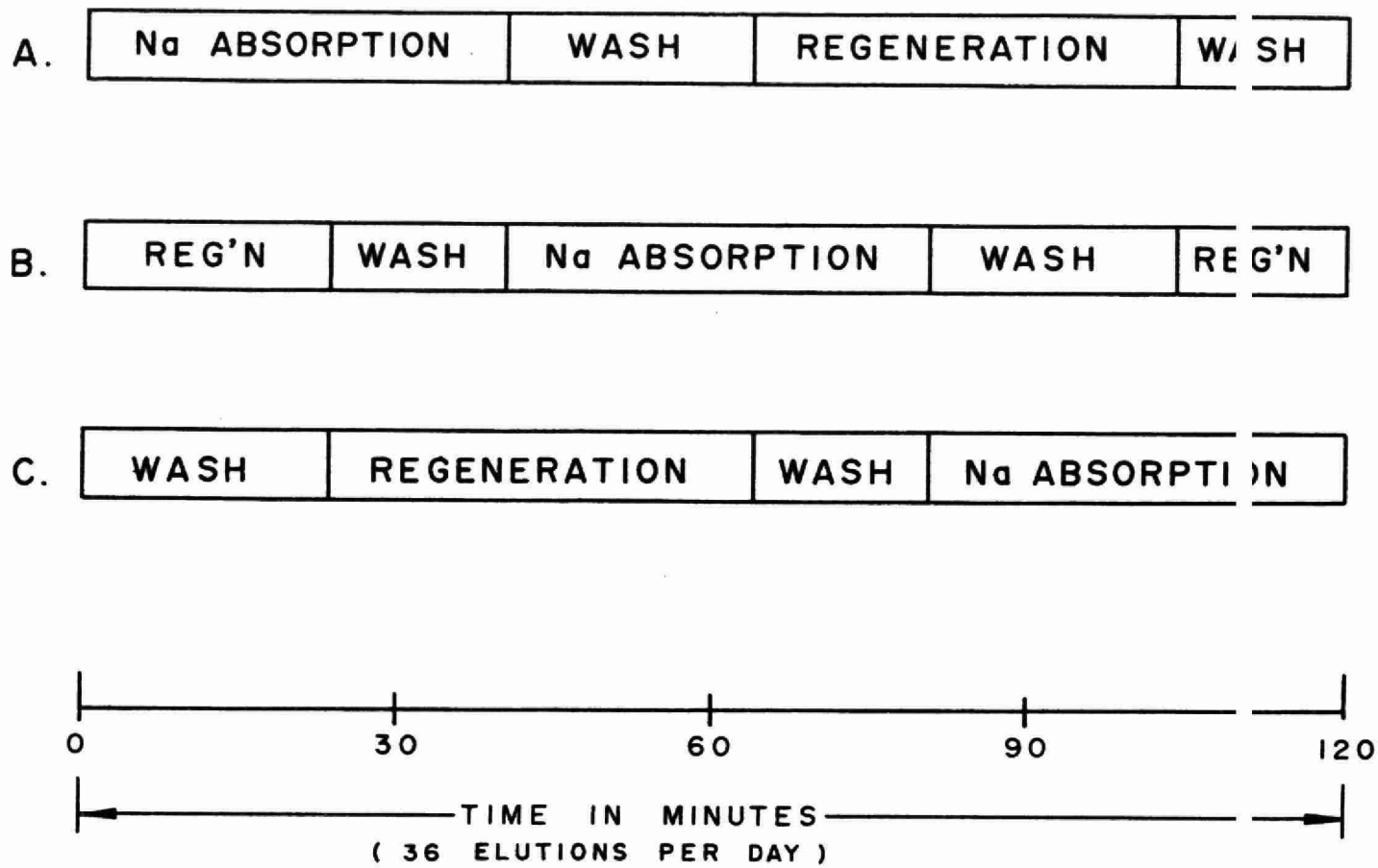

FIGURE 3 TIME SEQUENCE FOR COLUMNS

C. FRED GURNHAM

"APPLICATION OF AUTOMATIC SAMPLING TO TODAY'S WATER QUALITY CONTROL PROGRAMS"

BY

C. FRED GURNHAM, PRESIDENT,
GURNHAM AND ASSOCIATES, INC.,
CHICAGO, ILLINOIS

MARTHA I. BEACH, VICE-PRESIDENT,
N-CON SYSTEMS COMPANY, INC.,
LARCHMONT, NEW YORK

A water quality control program is an organized and well thought-out plan for determining and controlling the quality of the water leaving a plant or of the water recirculating through plant processes. Metering, sampling, and analysis are essential keys to organizing the most economical and efficient program. Only through such studies can we gain the knowledge of water and wastewater characteristics which is essential to both the design and the operation of any water quality control program.

Every industry, from the small, isolated cheese factory to the multi-faceted industrial giant, should be aware of the increasing emphasis being placed on water quality control. Local, state, and federal agencies, pressured by an aroused citizenry, are rigidly enforcing existing laws and pushing for the passage of even more stringent regulations. The industrialist can no longer afford to laugh off or ignore citizens' campaigns to "save the environment". If he fails to comply with water quality standards of his area, the fines imposed are outright business losses. A disregard for the wishes of the community in which he

knowledge of the streams involved, can enhance the profit picture by reducing water usage and lessening the quantities of valuable materials lost as waste. Improved product yields, increased efficiencies of operation, and more equitable sewer use charges are additional benefits.

The initial step in developing a sound water quality control program is the metering, sampling, and analysis of all the significant streams leading into a plant, circulating through the plant, and leaving the plant. This procedure is basic to any of the following purposes:

1. To meet regulatory agency effluent requirements.
2. To determine equitable charges for joint treatment.
3. To design adequate treatment processes.
4. To plan for water reuse and conservation.
5. To determine product losses, either for the purpose of planning a recovery system or for the design of processes which prevent such losses.
6. To determine treatment efficiency and to trouble-shoot any process failures.
7. To design treatment plant expansion.
8. To serve as the basis for development of an automated treatment system.

There are several basic requirements for an effective program. Not only the program director, but each individual staff member--especially the plant operator-must know what the program is all about-- why it has been initiated, how it will be conducted, and what it is expected to reveal.

Only the very largest of industries find it economical to employ specialists in water pollution abatement. For most plants, it is more efficient to retain a qualified pollution control consultant as director of the water quality control program. He has had experience in similar projects; he is familiar with the latest equipment, technology, and regulatory agency requirements; and he is qualified to interpret the data and to make process changes or design recommendations.

A second basic requirement for a successful program is a sound knowledge of sampling procedures and equipment. The accessibility of sampling sites, the general character of wastes and their flow pattern, and the analyses to be made are all variables that must be considered.

Requisites for a Sampling Program

To fulfill any or all of the purposes of a program, samples must be truly representative. The composition of the sample must be in close agreement with the composition of the stream from which it was taken and which it is assumed to represent.

Careful selection of the sampling site is crucial. Typical streams to be sampled include influent, effluent, laterals, receiving water above and below the outfall, effluents from each of the specific processes, pretreated or partially treated waste streams, and storm drains. Ideally, each sampling point should include all pertinent substreams and should exclude other streams that might contribute dilution or interfere with the analyses to be made. Pertinent substreams should be well mixed. Each stream to be sampled should have some form of flow measurement device. The site should be safe and reasonably accessible.

Unfortunately, many areas to be sampled are far from ideal, particularly in older industrial plants. When the preferred sampling site is located under a several-foot layer of concrete, or when an outfall is below the water level of the receiving stream, compromises must be made. Sometimes it is necessary to sample several contributory streams which made up the flow at the inaccessible site, and to combine these samples in proportion to their flow contribution. This procedure can result in a reasonable approximation of the actual effluent.

Selecting the time period for sampling is also crucial. A 24-hour composite is generally considered to be the most practical and convenient sample period. However, longer or shorter periods of time may be dictated by operating schedules, week-ends, or potential process upsets. If the water quality program is to include goals of product loss control, by-product recovery, and water conservation, it is particularly helpful to have data from each shift of operation. Hour by hour sequential composites can also pinpoint processes or operations which are causing particular problems or losses. In addition, there are often psychological benefits to be derived from such procedures. Supervisors and shift personnel usually react positively to the knowledge that they will share credit for water quality improvements originating on their shift.

Areas where flow is intermittent require special attention. These areas, which include storm drains and wash-down sites, frequently contribute significant volume and pollutant to the sewer system or receiving waters. Yet flow exists during only a small portion of the sampling period. Other streams need be sampled only when certain conditions exist, such as flow greater than a specified minimum, high or low pH, high temperature, or a specific ion. Equipment can be selected which will sample only when predetermined parameters exist.

Selecting the time base for sampling is the next important step in developing a program which will yield representative samples. The simplest method is to collect samples on a regular time basis. This is the most practical method - sometimes the only method - for sampling streams of fairly regular flow, large receiving waters, or areas where flow measurement is not possible. The frequent collection of a regular quantity of sample on a regular

time schedule may be expressed "VcTc" - volume of sample constant, time interval also constant.

Types of Sample

There are six major types of samples, labeled by their base and method of collection: individual or "grab," simple composite, sequential composite, continuous, hand proportioned composite, and automatic proportioned composite. The individual or "grab" sample is retained as a separate entity in its own container. The simple composite requires that all of the samples taken over the specified time interval be deposited in a single container. If, however, the composite is to be analyzed for oily materials by the API method, it must be split into two separate containers. This is true also if two different methods of preservation are required (other than refrigeration) for the proposed analyses. The sequential composite requires the collection of a series (usually 2 to 8) of individual samples per container, each container representing a specific time period. Such a procedure is particularly useful where the character of the waste may vary significantly from hour to hour, where batch dumping is expected, or where self-cancelling conditions occur, such as alternating high and low pH, which would not be apparent in a simple composite sample.

Continuous sampling, in which a very small amount of sample is collected in continuous flow, is useful for feeding monitors or pilot scale processes, or for sampling receiving waters. This technique is not recommended where the stream is high in suspended solids. If the continuous sample is composited, the product is large, at times too large to be conveniently handled.

Where flow charts are available, individual or sequential composite samples can be manually composited in accordance with the flow to obtain the hand proportioned composite.

The collection of samples automatically in proportion to flow is not a complicated procedure, but it does require additional equipment and an understanding of the principles of proportioning. Sampling in proportion to flow may be accomplished in either of two ways: by varying the frequency of sampling, or by varying the size of individual aliquots in accordance with flow volumes.

Where there is a transmitting flowmeter available, or where the flow follows a sufficiently regular pattern that it can be translated to a characterized cam programmer, the automatic sampler can be designed to collect and composite fixed amounts of sample whenever "X" gallons of flow are measured. The time between samples is thus varied by the volume of the flow, resulting in more frequent samples when flow is high, fewer when flow is low. This may be expressed as "VcTv"- volume of sample constant, time between samples variable. Where there are no flowmeters, but where flow is caused or varied by the operation of a pump, it is possible to correlate

pump capacity and running time, to actuate the sampler after "Y" minutes of pump operation and hence after every "X" gallons of flow. This method provides a means of collecting a flow-proportioned composite without a flowmeter or primary element; it also, indirectly, produces a reasonably accurate measurement of flow. It has been used successfully in combined sewer overflow research projects and in industrial waste installations where tributary flows are collected in wet wells and pumped intermittently to the treatment facilities.

The second method for collecting flow-proportioned composites does not require an integrating flowmeter, but only a primary flow measuring element such as a weir or flume which creates a known head-to-flow relationship, and a scoop or ejector sampler characterized to the weir or flume. This method reverses the volume-time relationship by collecting a variable amount of sample at regular intervals. It may be expressed by "VvTc"- volume of sample variable, time between samples constant.

Although weirs are generally less expensive and easier to install, it is preferable to install a Parshall or Palmer Bowlus flume if the wastes tend to stratify or if they have significant amounts of settleable solids or floating oils. Flumes also create a minimum flow restriction and head loss in the channel being measured; whereas constrictions and head loss of a weir cause back-up and sometimes flooding.

Which of these two ways of collecting samples in proportion to flow, VcTv or VvTc, is the most accurate, and feasible? This depends on the hydraulics of the site to be sampled, the character of the wastes, convenience, safety, budget, and whether the installation is to be permanent or temporary.

Where flowmeters are already installed or planned, the most convenient method of proportioning is to use a sampler that is paced by the flowmeter to select constant volume samples at intervals varied by the measured flow. Automatic samplers that operate on this principle are available from less than $300.00 for a portable model to more than $2,000 for a unit that includes refrigerated sample storage and provides for installation in the laboratory or other convenient location some distance from the sampling site. This type of sampler produces representative composites as long as the unit is properly installed, the wastes are well mixed, and the flow does not vary more than about a 5 to 1 ratio.

In areas where there are no flowmeters, but where it is possible to install a weir or flume, it may be less costly to collect flow-proportioned samples with a proportional or characterized scoop. In situations where flows vary greatly, carry heavy waste concentrations at low flow, contain floating oils and solids, or tend to stratify, the only way to get a truly representative sample is to cross-section the stream depth on a regular time base

with a characterized scoop. Another useful feature of the characterized scoop method of proportioning is that the total volume of the composite can be used to determine the total flow for the sampling period, without the use of a flowmeter.

Selection of a Sampler

After the sites and the time base for sampling have been decided, the equipment can be selected. All of the variables mentioned above must be considered: accessibility of sampling site, general character of the wastes, flow patterns, and the analyses to be made.

A great many noncommercial or "home-made" sampling devices are currently in use, in industry and elsewhere. Many of these are extremely ingenious; a somewhat lesser number are adequate for their intended purpose; and some are fully satisfactory. Whether home-made or proprietory, equipment selection should be based on a realistic evaluation of cost, including engineering and labor, cost of operation, simplicity of operation, reliability, and maintenance. Equipment must be suitable for the conditions under which it will function. Therefore it is necessary to consider the following questions:

1. Will the installation be permanent or temporary: if temporary, should it be portable? Will the unit be indoors, or outdoors, protected or exposed to weather conditions. How convenient is the access?
2. What are the power requirements: 110-volt AC, low voltage battery, compressed air, liquefied gas, vacuum, or some combination of these?
3. Are the necessary flowmeters, weirs, or flumes available, or is their installation possible?
4. What is the lift required or head available?
5. Will the equipment be expected to function under hazardous conditions: in the presence of explosive or toxic materials, in corrosive or damp areas, under high or low temperatures?
6. Will the equipment be liable to damage by accident? Will it be accessible to vandals?

The proper equipment to do the job is not always the most expensive and elaborate device on the market. Each type of equipment must be judged according to its capabilities and limitations, as well as for its operational characteristics as applied to the particular stream to be sampled.

Why select automatic samplers? Because they are ready and willing to work 24 hours a day, automatic samplers reduce the manhours necessary to carry out a program, and provide a more reliable product than hand sampling. The number of modifications commercially available makes it possible to tailor a unit to the particular job. Automatic samplers are first classified as portable or

permanent. Permanent samplers are further classified as to the method used for collecting samples, including: cup or bucket-elevator, scoop, vacuum or compressor, and pump.

The cup or bucket-elevator sampler must be placed directly over the pipe or channel carrying the waste. It can be adjusted to collect samples from depth within the flow. Floating materials in the stream, however, tend to collect on the chain or sprocket and subsequently foul the mechanism.

Either characterized or fixed volume scoop samplers are available. The characterized scoop, better known as the Trebler scoop, is shaped to collect a volume of sample that is proportional to the flow over a weir or through a flume. The head-to-flow relationship of the primary element determines the curve of the scoop required. Characterized scoops are available for use with V-notch weirs (30°, 60°, and 90°), rectangular weirs with or without end contractions, Cipoletti or trapezoidal weirs, Parshall flumes, and Palmer Bowlus flumes. When used with a weir, the characterized scoop rotates or oscillates into the stream to the depth of the datum line of the weir, to collect samples of the liquid which actually passes over the weir. When used with a Parshall or Palmer Bowlus flume, the scoop passes through the entire depth of the stream and collects a full cross-section of the flow from bottom to top.

The fixed volume or "M-S" scoop, developed by McGuire and Stormgaard, is shaped to collect a fixed volume of sample regardless of the depth of the stream. It can be used to collect flow-proportioned samples if it is paced by a flowmeter, a flow characterized cam programmer, or a pump running-time totalizer.

Scoop samplers are well suited for wastes that have a high grit content, that tend to stratify, or that have floating solids or oils. They must, however, be located directly over an open channel or in a manhole with a sufficient space for raising and lowering of the scoop. An oscillating scoop requires less space than a rotating scoop.

Vacuum or compressor samplers draw or eject samples from a vessel immersed in the waste stream. The shape of the vessel may be such that it fills in proportion to the flow through a primary element. Samples may be lifted from deep sewers or conveyed to areas safe from toxic gases. The units are inherently explosion-proof if the electrical components of the programming device are located away from the hazardous area. However, they require both electrical power and a source of compressed air or inert gas. The use of compressed air makes the samples unsuitable for dissolved oxygen analysis, but nitrogen or other inert gas can be used to partially circumvent this problem.

There are numerous variations of the pump sampler. One model continuously pumps a portion of the stream to a remote

chamber from which samples are dipped, scooped, or siphoned to a sample container. Another model continuously pumps a portion of the wastestream to a location where a time or flow-activated valve momentarily diverts the entire pump throughput to a sample container. A third version intermittently pumps a portion of the stream, and a portion of this throughput is diverted to a sample container. A fourth variety is equipped with a low capacity or peristaltic pump which, operating either continuously or intermittently, transfers its entire throughput to a single container or series of containers.

The inlet on pump samplers must be located in a well-mixed position of the stream. Exhaust or unused throughput should be returned downstream of the inlet and flow measuring device. Pump capacity must be great enough that the liquid remains well mixed, particularly where there is horizontal piping in which solids could settle. With low capacity or self-priming pumps, lift should be kept to a minimum to insure representative pick-up of solids and to prevent settling in the inlet line. Inlet velocity must be at least 1/4 to 1/2 feet per second. Provision for flushing, backwashing, or draining to remove previous samples is essential in models which pump intermittently. Submerged or positive displacement pumps make it possible to locate the sampler in a safe, convenient area; they also overcome lift or other hydraulic problems at the site.

If wastes contain appreciable quantities of fibrous materials or have high grit content, pump impellers and shafts must be cleaned or replaced frequently. The type and capacity of the pump used in any model determines the sampler's ability to handle various types and quantities of particulate matter in the stream.

Several commercially available permanent samplers provide mechanically refrigerated storage areas for preservation of the collected samples. Others can be supplied with separate refrigerators modified to permit transfer of the sample directly into the container located inside the refrigerator.

Those samplers which pump through a weir chamber for collection by a dipper usually provide areas which can be used for probes to record constantly changing parameters such as pH, temperature, dissolved oxygen, and specific ions. Alarms can be connected to these probes to signal parameters outside of a predetermined range.

Portable samplers are designed for temporary installation and convenient relocation. They are particularly useful for survey work, regulatory agency investigations, and research studies. They are invaluable for trouble shooting treatment plants, checking effluent from various processes and substreams within an industrial plant, and determining the quality of the receiving waters above and below an outfall.

Portable samplers with pumps may be operated by line power (115vAC), dry cells, or storage batteries. One portable pump sampler can be used in conjunction with a transmitting flowmeter to produce flow proportioned composites. Several models collect a number of individual samples or sequential composites. These are particularly useful where flow proportioned samples are not possible, or where the quality of water or waste varies from hour to hour because of production or process operations. Other samplers are operated by canned gas (Freon), or by the vacuum produced by evacuation of the sample bottles in conjunction with a spring clock drive. Portable units which are operated by batteries, gas, evacuation, or spring-wound mechanisms have limited power and lift capacity, and must be frequently replaced, recharged, renewed, or rewound. Their chief value is that they make it possible to sample automatically in areas where there is no other source of power. The vacuum powered or suction sampler is inherently explosion-proof, and is the only sampler which can be used safely in an explosive atmosphere. Special provision can be made to start some portable samplers on command when storm flow or other specific conditions prevail.

Obviously the sampler must produce a sample of adequate size for the testing program planned. Preservation of the sample is often an important consideration. Preservation of samples by mechanical refrigeration is not usually a built-in provision of portable samplers, but samples can be kept chilled by enclosing the sample container with ice, dry ice, or cans of "Skotch Ice". In cold weather, protection from freezing may be equally significant. Chemical preservatives can be used if they do not interfere with the analysis to be done on the sample; sometimes chemical preservatives are required to protect certain "delicate" parameters from change.

Whether a permanent or a portable sampler is selected, it is important to give some thought to the container. This must provide an adequate volume of sample for the analyses which will be run, and must have sufficient capacity for unusually high flows when proportional samples are taken. The container material should not react with the contents of the waste, and must be easy to clean and convenient to handle.

To make the right equipment choice, it is necessary to compare and coordinate conditions at the sampling site with the capabilities of equipment available within the budget provided. Accuracy and reliability in collecting representative samples are essential if the cost of the analyses and data handling are to be justified. Manufacturer's literature provides much of the information needed; however, the services of a pollution control consultant are worth far more than their cost.

No matter what type of automatic sampler is selected, it will

be the least expensive part of the over-all water quality control program. No investment, however small, is justifiable if the samples are not analyzed and if the data is not continually reviewed. Accurate, up-to-date records and regular reports to management are necessary. The correlation of production schedules and housekeeping procedures with waste volume and characteristics may reveal product losses, leaks, or excess water use. Proper use of the data can result in reduced costs for utilities, chemicals, or sewer use. A reduction in hydraulic loading may allow for increased production without treatment plant expansion. Reductions in BOD, COD, phosphates, solids, and metals cuts treatment costs and prevents citations or law suits. Data may pinpoint trouble some wastes which can be isolated and treated more economically at the source.

An adequate understanding and knowledge of the waste stream can come only from metering, sampling, and analysis and from the coordinated water quality control program. This knowledge is an economic, technical, and legal necessity if industry is to continue profitable operations. None of this, however, is worthwhile if the samples are not representative of the streams from which they come.

The authors would like to give credit to John S. Beach, Jr., President of N-CON Systems Co., Inc., John P. McGuire, President of Consolidated Technology, and Betty A. Rose, of Gurnham & Associates, Inc., for their assistance in assembling and correlating this information presented.

SESSION CHAIRMAN,
MR. C. S. DUTTON,
PROCTOR AND REDFERN LTD.,
TORONTO, ONTARIO

C. FERGUSON

"MINEWATER TREATMENT - INCO SUDBURY DISTRICT OPERATIONS"

BY

C. FERGUSON

M. MORRIS

MINING AND SMELTING DIVISION,
THE INTERNATIONAL NICKEL COMPANY
OF CANADA LTD.,
COPPER CLIFF, ONTARIO

PURPOSE

Nearly all activities in today's world tend to pollute our environment. Public attention and concern has been aroused by the increasing emphasis on pollution-oriented articles in the news media.

Often an accusing finger points to industry; much is being said of the damage done by industry but little said of what industry is doing to reduce or eliminate such damage.

Protection of our environment is one of the obligations of responsible corporate citizenship but so also must be the distribution of information to keep the public informed of the waste treatment control programs underway at each plant.

As part of the preparation of this paper, a literature survey was made on the subject of minewater treatment. Although it is known that many minewater treatment systems exist, little published information was found. Ours is not a unique case. Many industries have little documented information regarding treatment control. As industrial waste treatment engineers we must make public our activities not only to

advance the state of the "art" but also to serve the community upon which we owe our very existence. It is hoped this paper will serve not only to document the activities of The International Nickel Company in the field of pollution control but also to stimulate others in the mining industry to make public their own efforts.

BACKGROUND

Operations of The Internation Nickel Company in the Sudbury area encompass nine operating mines (with four more in the development stage), four concentrators, two smelters, an Iron Ore Recovery Plant and a Copper Refinery.

Ore production from the mines in the Sudbury Basin is currently about 95,000 tons per operating day (Fig. No. 1). This represents a feed rate to our reduction plants of more than 25 million tons per year.

Underground mining of these sulphide ores tends to be at great depth; the Creighton operations, for example, extend below the one mile mark. Water is introduced to the underground workings from several sources namely flushing water required for drilling, underground water courses encountered during the mining operations, seepage through fissures extending down from surface and, at some mines, from hydraulic backfilling operations. Combined, these flows constitute a daily water discharge rate from the mines of almost 8 million U.S. gallons per day (Fig. 1).

In contacting the orebody, these waters leach out base metal sulphides principally those of copper, nickel, and iron resulting in an acid mine water which must be pumped to surface to maintain the mine operations in a dry working state. Regulatory agencies take exception to the direct discharge of such untreated waters to a receiving water course. Consequently The Ontario Water Resources Commission have set certain limits, or more accurately, "objectives", which spell out the quality standards that these waters must meet prior to their final discharge. Total contained copper, nickel and iron are limited to 1 mg/l, 1 mg/l and 17 mg/l respectively, suspended solids must not exceed 15 mg/l and the pH must lie between 5.5 and 10.6. Few discharged mine waters can meet such standards without some form of treatment.

The following will outline the successes and difficulties encountered in the development of treatment methods to meet these pollution control objectives.

CLARIFICATION

In the early years of mining underground waters were collected in simple rectangular sumps located at various pumping horizons. A typical sump was simply an 8 ft x 9 ft drift perhaps 80 ft long with a dam at each end. Water

was fed into one end with the sump pumps taking suction at the opposite end (Fig. 2). These sumps were often twinned so that periodically one could be drained out and the retained sludge scraped or slushed out into the ore hoisting skip. With the advent of hydraulically-conveyed backfilling techniques, the water and suspended solids to these sumps were dramatically increased. The original sump proved to be a poor clarifier. Suspended solids carry-over were of concern not only to the Regulatory agencies but also to the mine maintenance engineer. High-head underground pumps being close-tolerance machines are extremely vulnerable to damage from these contained solids. Initial investigation into this problem by the mine engineers led to the development of the cone settler (Fig. 3) which is basically a circular clarifier with feed entering a centre well and clarified water discharging over a peripheral weir. As designed, the heavy sludge would settle and be drawn-off by gravity at the bottom of the cone. The cone settler produced quite an acceptable effluent however, a major operating problem developed. Even with the "draw-off" valve wide open, sludge would remain adhered to the sides of the clarifier and the feed water would simply "rat-hole" down through the centre of the basin. Eventually, with the majority of the basin volume occupied by a permanent sludge inventory efficiencies were reduced to a point where the suspended solids content in the effluent equalled that of the influent. The cone settler design was subsequently discontinued.

Various baffle arrangements in the original rectangular sumps were then considered resulting in the adoption of the vertical-flow principle. This vertical-flow arrangement was installed (Fig. 4) in the 3000 L and 4000 L sumps at our Garson Mine. In this arrangement feed enters the clarifier through perforated pipe distributors along each side of the sump. Plywood baffles hung from the operating platform force the influent stream to pass under each baffle, rise up through the sludge-blanket and discharge into a pipe launder running the full length of the basin. Underflow solids are drawn off through plug valves located at approximately 8 ft centres along the bottom of the basin. These plugs operated by levers or "gin-poles" release the solids which report to a rectangular holding sump located directly under the clarifier. For ease in removal, air agitators are located along the length of the sludge storage sump to maintain the contents in an uncompacted condition. With adequate size this type of clarifier offers good overflow results, but its disadvantages list continuous maintenance and underflow which to our experience has never improved beyond 20% solids.

About this time large scale hydraulically-placed cemented sandfill was proving its worth at the mines, an advent which lent a new complexion to the mine water problem. Such highly alkaline waters from the waterborn cemented backfill provided suspended solids with improved settling characteristics mainly

due to the higher insoluble hydroxide content. It did result, however, in much greater volumes of settled sludge being contained by these underground systems and this presented problems of its own. The settled sludge proved to be very gelatinous and impossible to concentrate to high solids content by gravity settling. High volumes of this material were hoisted to surface in top-dump skips. Skip hoisting proved to be a messy, time-consuming task which began to eat into the ore hoisting time. With the advent of bottom dump skips it was obvious that slurry hoisting in skips had to be abandoned.

The problem was attacked from two angles: (1) reduce slimes carry-over from the filling operations thus reducing the amount of sludge to be handled and (2) developing an improved method of disposal for the collected slimes.

Flocculant tests were made to determine if the very fine minus 800 mesh slimes material which constitutes from 2-5% of all backfill could be retained in the stope during pouring operations instead of overflowing to the drainage ditches and creating a major disposal problem. Details of studies conducted at the Frood and Garson Mines are reported in the literature[1] but can be summarized here. The tests indicated that a high molecular weight polyacrylamide, added in a one percent solution at a rate of 0.0075 lbs. per dry ton of backfill produced optimum clarity of the overflow in the shortest length of time. An 80% reduction in fines carry-over has been achieved at the Garson Mine with alluvial sandfill as the filling media at a chemical cost of 1.01 cents per dry ton placed. At Frood Mine where classified mill tailings are used for backfill, similar results have been reported.

SOLIDS DISPOSAL

Testwork on an improved method of handling the settled solids began at Garson with the installation of a pilot-scale belt-discharge vacuum filter (Fig. 5). Feed at 10-15% solids was taken from the sludge-holding sump and results indicated (Fig. 6) that these very fine (50% minus 1600 mesh) solids could be filtered at a rate of 130 lbs./sq.ft/day or 5.4 lbs per sq.ft./hr. with a cake moisture of 70%. Although the rates are low and the moisture high the filter produced a thixotropic material which could be handled in mine cars or on conveyor belts.

As a result of this test program two 4 ft diameter x 8 ft filters have been installed on the Garson 4000 level (Fig. 7).

Collected sludge is pumped to the filters by a variable-speed progressing-cavity pump at a rate sufficient to produce a near overflow level condition in the filter vats. Filter cake drops onto a short conveyor which discharges to an ore bin 46 feet below via a vertical bore hole. Fresh water is used for the vacuum pump requirements with mine water pumped

from an adjacent clear water reservoir for the filter cloth sprays. All filtrate, seal and overflow waters are collected and recirculated back to the clarifier.

Actual operating results indicate that the filtering rate could be dramatically improved with increased feed solids concentration. However, as previously mentioned, the vertical-flow clarifier is unable to provide satisfactory thickening of the underflow solids.

At the Copper Cliff North Mine this problem has largely been overcome by feeding a similar belt discharge vacuum filter from a 40 ft diameter, 12 ft deep thickener with its mechanism modified to suit our clarification requirements (Fig. 8 and 9). These modifications include a deep flocculating feedwell, 'V'-notched overflow weir and a deep discharge cone stirred by additional thickener rakes. Overflow is collected in the launder and discharged to twin clear water reservoirsahead of the mine pumps.

Clarifier underflow is mechanically scraped to a centre discharge hopper where a control valve feed underflow solids to the 4 ft diameter by 5 ft face vacuum drum filter. Filter cake is discharged into mine cars spotted directly below the filter and thence to the main ore pass where it joins the ore flow from the mine. This facility is designed to operate on a single shift, five-day-week basis with the clarifier mechanism capable of handling any extra sludge accumulated over a long week-end period.

Preliminary operating results indicate this type of clarifier mechanism to produce a higher solids concentration in the underflow which in turn results in much higher filtering rates. In contrast to the Garson system, at Copper Cliff North underflow solids concentrations of 20-30% solids are being achieved with filter cake moisture concentrations of 36-40%. Test work with the addition of lime and coagulent-aids are proceeding, but full details are, as yet, unavailable for publication.

CHEMICAL TREATMENT

Removal of suspended solids from underground mine waters does not provide a complete solution to our mine water treatment problems. Many older mines still operate with the original simple clarifier design and not all mines enjoy the chemical benefits of hydraulically-placed cemented backfill programs. Clarification facilities alone cannot solve the problem of dissolved metal salts. Backfill spillages, leaks, power failures and difficulties encountered in operation of underground sumps produce a variation in quality and quantity of discharge waters and it became apparent that some form of chemical treatment was required at many mines to ensure constant quality control of the final effluent.

A general review was made of chemicals suitable for adjusting pH and precipitating the dissolved heavy metals. Caustic (NaOH) was discarded because of its dispersant qualities and obvious safety hazard. Literature on the subject [2,3] suggests that lime would provide superior overflow clarity but does give a rather bulky precipitate. Limestone ($CaCO_3$) produces excellent compaction of the underflow but cannot precipitate the dissolved metals to a satisfactory degree. Lime was therefore chosen.

For ease and simplicity of handling the lime is purchased as dry hydrated lime ($Ca(OH)_2$) and added to the mine water by variable-speed volumetric feeders. It is foreseen that the operation of lime treatment will be directed towards bulk storage silos mounted over the lime feeders. With this in mind, two surface treatment facilities presently under construction were designed to bear roof loads up to 20 tons.

A chemical treatment test program utilizing lime was performed at our Murray Mine during 1967. Murray mine water is pumped to the surface untreated and discharged to a swampy area south of the mine. A dam was built to create a 10 acre pond and provide a theoretical 10 day retention to the discharge waters. The lime addition test program was initiated in August 1967 and ran for approximately three months, the results of which are shown on Fig. 10. It can be seen that 40 to 50 mg/l dissolved nickel in the untreated water can be reduced below 1 mg/l at a lime feeding rate of 1200 lbs/day. No record of copper or iron concentrations are plotted as they are normally low even without treatment and with treatment, are only present in trace quantities. Further studies at the Frood Mine provided similar results. Again dissolved copper, nickel and iron in the effluent could be reduced to acceptable levels with appropriate addition of hydrated lime.

We had, therefore, established that successful control of plant effluent could be achieved but provision had to be made for acceptable settling conditions and eventual removal of the settled material.

Initially, natural ponds, swamps etc., were used to offer quick and inexpensive basins. The basins unfortunately were affected by local hydrology, subject to channeling etc., and were difficult to clean out. Many such pond systems are being replaced.

The standard surface treatment facility now being installed at our Sudbury District mines consists of the lime-feeding system previously discussed installed up-stream of twin clarification ponds sized to offer approximately 10-20 days retention to the average discharge flow. A typical pond would have two basins 100 ft x 150 ft x 7 ft water depth. An inlet structure allows for flow to either or both basins. Basin construction is normally gravity-wall section consisting

of an impervious clay core protected with a dressing of gravel and rock on the interior and exterior slopes. With good clay in short supply, future designs may incorporate one of the new synthetic membranes now on the market which are proving themselves capable of withstanding the harsh winter conditions in Northern Ontario.

CONCLUSION

The final solution to the problem of placing the retention facility below ground or on surface is still not completely resolved. Ideally if water treatment could be completely performed underground in a singular system, overall treatment costs can be kept down. However, in some mining applications, it may be highly impractical to drain all mine water to one location underground and furthermore, the practice of mining is often not clearly predetermined and expensive clarification systems could quickly be rendered undersized or mal-positioned. Better overall quantity/quality control can obviously be established on the surface but the dissolved and suspended contaminants trapped in the pumping system on its way to surface are then being left unconsidered; the same fraction of material which initially mobilized this field of study.

To date The International Nickel Company has tested and proven that mine water from sulphide ore operations can be successfully treated with hydrated lime and clarified to meet the latest Regulatory "objectives". The final company objective of developing a standard system for all mining applications still remain a goal in the future. A second field of study, namely underflow disposal, is presently receiving extensive attention to convert this troublesome often high grade material into a handleable state which can yield a direct profit return.

1, CONIBEAR, J.K. - "The use of alluvial sandfill and improvements in hydraulic filling methods of the mines of The International Nickel Company of Canada, Limited" presented at the annual meeting of the A.I.M.E., Denver, Col. Feb. 15, 1970

2, HILL, David W. - "Neutralization of Acid Mine Drainage" W.P.C.F. Journal Vol 41 No. 10 Oct.1969

3, RILEY, P.E. - "Neutralization and Precipitation Studies on Acid Mine Water" Internal Publication by Dorr-Oliver Laboratories 7/3/68

PRODUCING MINES

MINE	(APPROX.) DAILY PRODUCTION (WET SHORT TONS)	MINE WATER DISCHARGE (U.S.G.P.D.)
FROOD - STOBIE	30,000	3,000,000
CREIGHTON	20,000	766,400
CLARABELLE	11,000	600,000
LEVACK	8,000	851,000
MURRAY	7,500	650,000
CREAN HILL	5,000	210,000
GARSON	5,000	760,000
MACLENNAN	1,000	15,000
COPPER CLIFF NORTH	7,000	350,000
TOTALS	94,500	7,342,400

DEVELOPING MINES - PROJECTED FIGURES

COPPER CLIFF SOUTH	6,000	300,000
COLEMAN	4,000	200,000
KIRKWOOD	1,500	75,000
TOTTEN	1,500	100,000
TOTALS	13,000	675,000

Fig. 1

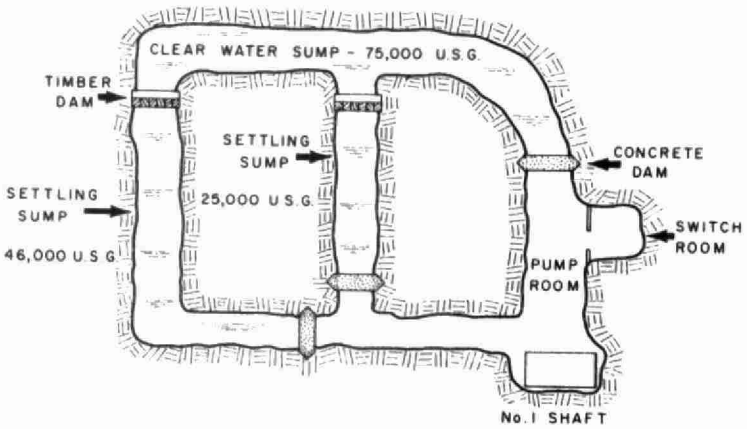

KIRKWOOD MINE - PUMPING HORIZON

Fig. 2

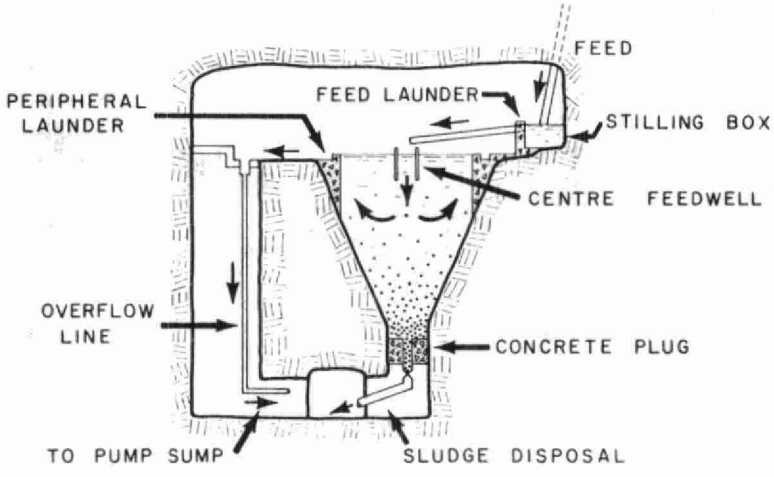

MURRAY MINE CONE SETTLER

Fig. 3

UPFLOW CLARIFICATION SYSTEM

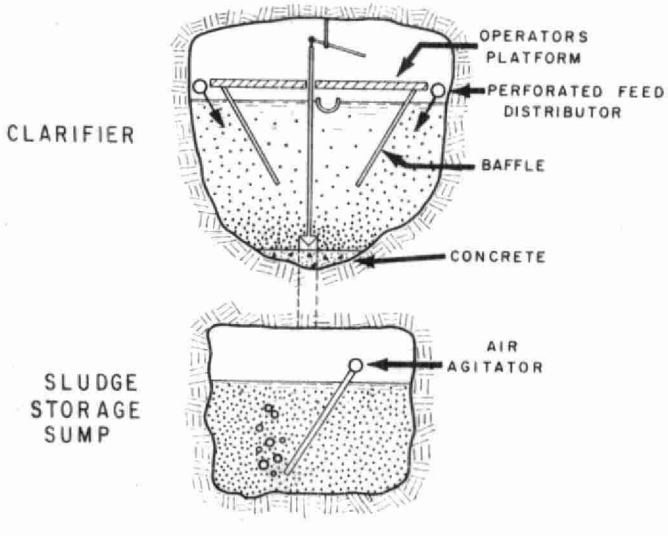

Fig. 4

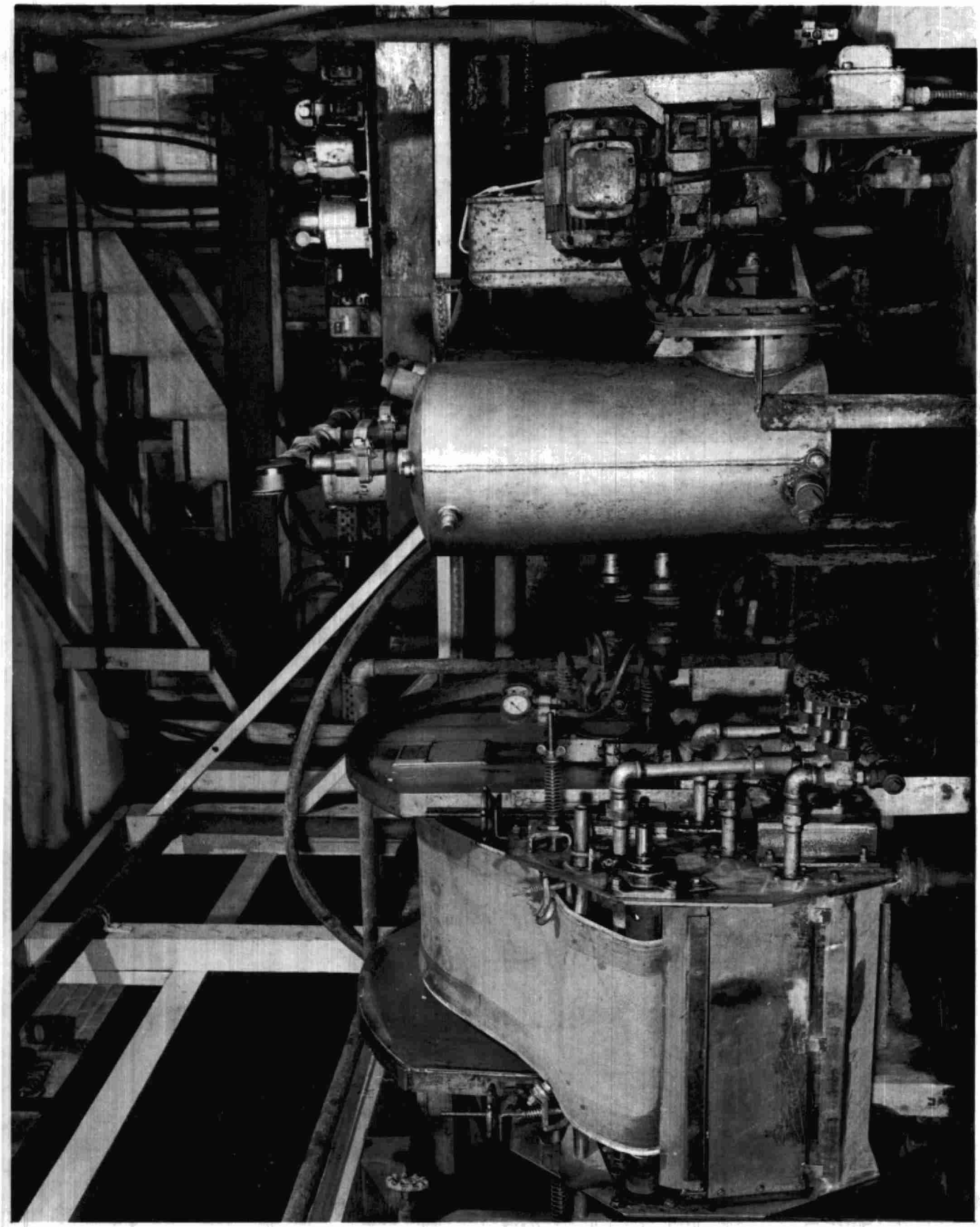

BELT-DISCHARGE PILOT VACUUM FILTER PLANT Fig. 5

TEST RESULTS - GARSON MINE

DRY FILTER CAKE PRODUCTION

DATE	% SOLIDS FEED	RATE LB/FT^2/DAY	% MOISTURE	VACUUM IN HG
DEC. 1	8	103	71.0	10-12
DEC. 2	11	140	68.6	11-12
DEC. 7	10	128	68.8	10-12
DEC. 29	11	134	69.5	10-12
DEC. 30	12	143	71.1	10-12
AVERAGE	10	130	69.9	10-12

SLUDGE SIZING ANALYSIS

MESH	% WEIGHT
+ 270	22.1
400	2.5
800	3.3
1200	13.0
1600	9.7
-1600	49.4
	100.0

Fig. 6

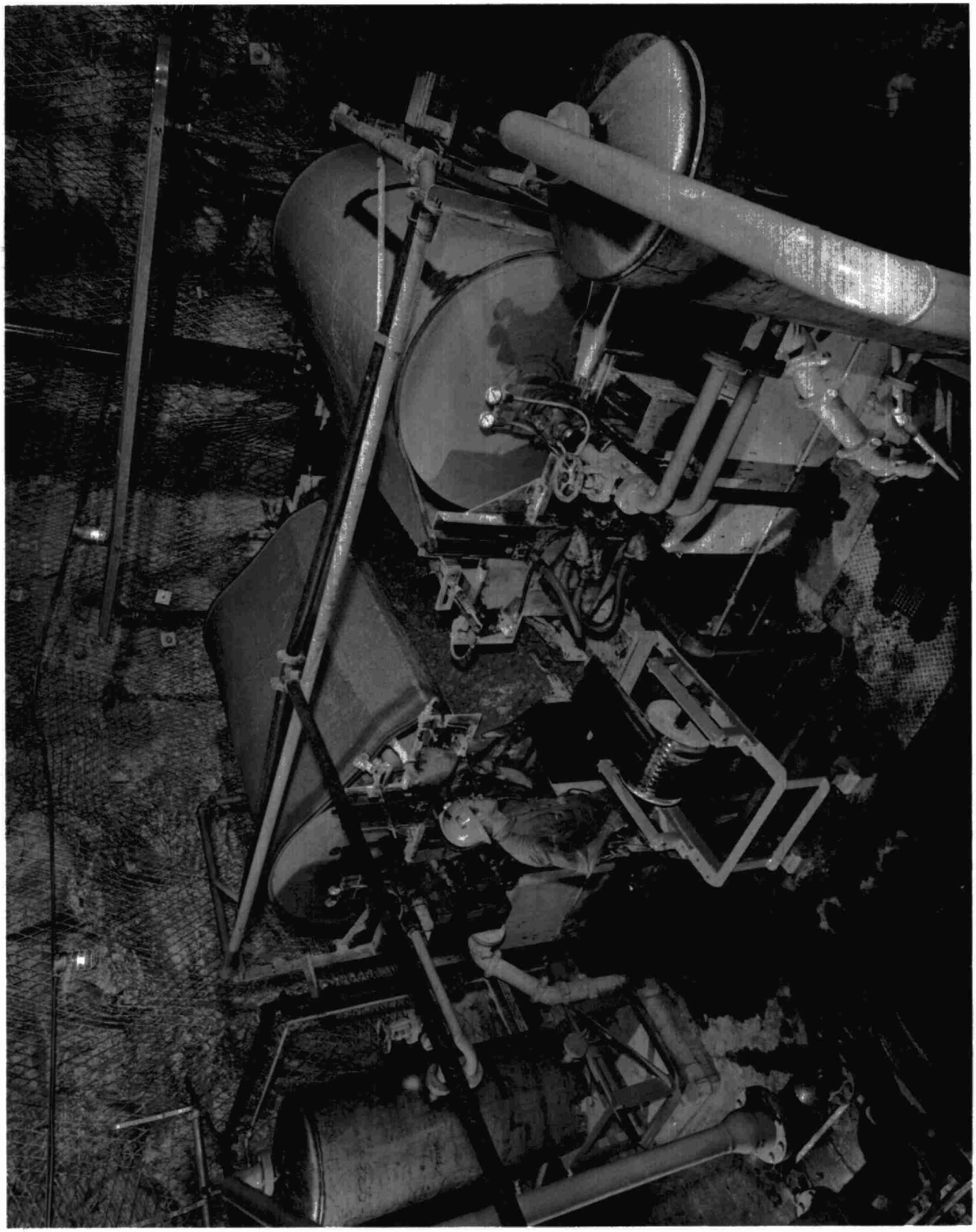

GARSON MINE FILTER STATION Fig. 7

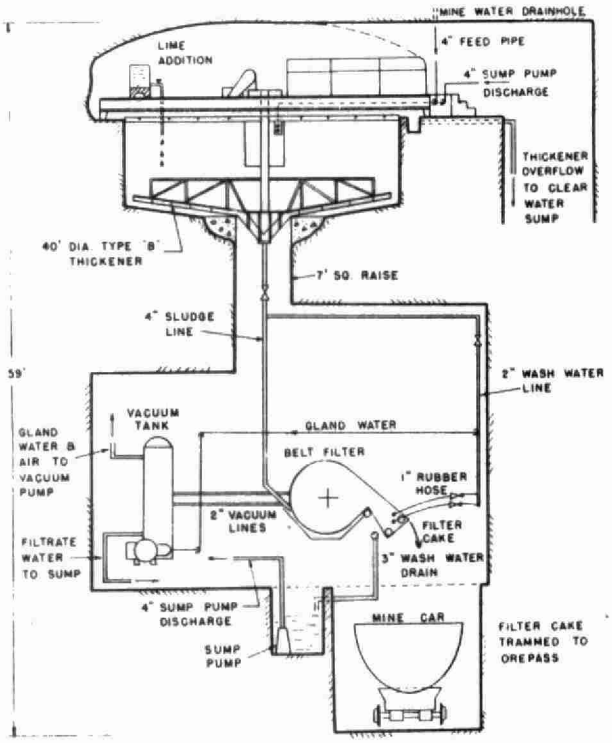

Fig. 9 COPPER CLIFF NORTH MINE — MINE WATER CLARIFIER & FILTER GENERAL ARRANGEMENT

MURRAY MINE
LIME TREATMENT STUDY
1967

• TREATED EFFLUENT

○ UNTREATED INFLUENT

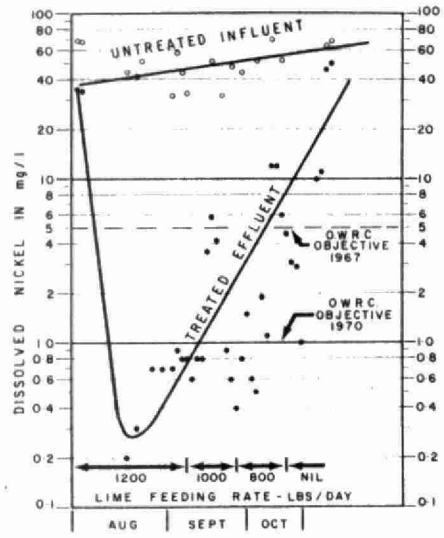

Fig. 10

"DEEP-BED FILTRATION OF STEEL MILL EFFLUENTS"

BY

E. S. SAVAGE, MANAGER,
RESEARCH AND DEVELOPMENT,
WATER AND WASTE TREATMENT DEPARTMENT,
DRAVO CORPORATION,
PITTSBURGH, PENNSYLVANIA

INTRODUCTION

Filtration can be defined generally as a liquid-solid separation process where solids suspended in a liquid are retained in a filter and solids-free liquid passes through the filter and is discharged as "filtrate". Deep-bed filtration is a special type of filtration process where the solids penetrate into the voids of the filter media. Contrary to most other types of filter systems, the solids are not retained near the surface of deep-bed filter systems, and the total volume of the voids is an important consideration in the design of the system.

Among liquid-solids separation processes in general use on sanitary engineering applications, filtration is unique because the filtrate quality obtained usually is an absolute value, independent of filter rate, media depth, and influent concentration within the range of these variables usually employed in current practice. The absolute value of filtrate quality is maintained regardless of variations in operating conditions because the full capacity of the filtration systems normally is not utilized and an insurance quantity of media is provided to guarantee filtrate quality. Only recently have serious efforts been made to utilize fully the

amount of media provided and thus "optimize" the system.

Filtration--whose origin is lost in antiquity--is one of the oldest physical separation techniques devised by man and many types of filtration devices and systems are in current use. Only one of these can be classified properly as deep-bed filtration. This discussion will be limited to deep-bed filter systems with emphasis on the use of these systems for the removal of iron and oil from steel mill effluents.

FILTRATION THEORY - MECHANISMS OF REMOVAL

Deep-bed filtration can be defined as a special type of rapid-sand filtration where at least four feet of media is used to perform the separation function, exclusive of underdrains or media support layers. The process has been used for potable water filtration, industrial process water and waste water filtration predominantly in Germany and Russia, but also in other countries for many years. Although filters of this depth have been used in the United States and Canada for various applications, these systems generally cannot be classified as deep-bed filters because the media has not been used through out its depth and removals take place predominantly at the media surface. However, in the last five years, deep-bed filter systems as defined above have been introduced into the United States and are presently in use for filtering steel mill effluents, secondary sewage treatment plant effluents and industrial process water.

Several attempts have been made to identify specific mechanisms which result in separation of suspended solids from the liquid during a filtration process in order to isolate and mathematically model the predominant mechanisms. Some of the best work in this area has been done by Professor K. J. Ives at University College in London, England. A quantitative investigation of deep-bed filtration mechanisms can be pursued by referring to the work done by Professor Ives.

A qualitative examination of the mechanisms of removal which have importance in deep-bed filtration processes is of interest and will help provide a better understanding of the problems that are encountered when optimizing a deep-bed filtration system.

A. Straining - Straining is the process of separating solids by passing the liquid through openings or pores smaller than the size of the particles to be removed. The solids cannot pass through the openings and accumulate on the surface. Separation is accomplished in one plane only. As previously mentioned, this mechanism cannot predominate in a deep-bed filtration process, by definition. Microstraining is an example of a process where straining is the predominant separation mechanism.

B. Inertia - Theoretically, suspended solids can be removed by flowing through the filter with a velocity sufficient to cause impact of the solids with the sand grains. This effect is used in certain types of air scrubbers, but it has been demonstrated that impact is not a major contributor to separation in rapid sand filter systems.

C. Interception - A particle can be removed if it follows a streamline through the filter if the streamline approaches the grain to within the particle radius. This may be a factor with filtration of certain size particles.

D. Diffusion -For particles of the order of one micron or less in size, Brownian movement is significant and diffusion may be a contributing mechanism.

E. Surface Forces - If a particle approaches a grain surface, surface force between the grain and the particle come into action. The forces are those of electrical double-layer interaction (Zeta potential is an example) and those arising from intermolecular attraction (van der Waals forces). Surface forces can be a factor especially when chemical treatment is used in conjunction with filtration.

F. Gravity - Gravity has been demonstrated to be a significant mechanism in rapid-sand filtration processes. This type of filtration produces a laminar flow regime characterized by paraboloid velocity distributions in the pores which would permit even small particles with densities close to water to settle out in the very low fluid velocity areas.

G. Hydrodynamics - The overall flow through a deep-bed filter is laminar, but the complex flow-paths probably lead to secondary laminar flow conditions where the particles in suspension are brought into contact with grain surfaces. This is one explanation why particles which are too large to be affected by diffusion, but with a density very close to water can be removed by deep-bed filtration.

H. Predominant Mechanism - In deep-bed filtration, no one mechanism can explain the results obtained. In actual practice, removal appears to be due to a combination of mechanisms which interact in a complex and dynamic system to produce a high quality effluent when basic considerations are understood and applied properly.

DEEP BED FILTRATION OF STEEL MILL EFFLUENTS

It has been common practice for the last 15 years to use deep-bed filtration systems for removing mill scale and oil from steel mill hot rolling waste waters. This type of waste treatment system presently is under design for several applications to the Canadian steel industry and several major systems are in use on the American side of the Great Lakes.

Deep-bed filters are only one component of the complete treatment system. Other system elements include roughing pits, primary scale pits, oil skimming and disposal equipment, scale handling facilities and backwash disposal facilities. Recycle systems may include cooling towers and chemical feeding equipment to maintain water stability.

Figure 1 presents a flow diagram of a typical treatment arrangement for a blooming and billet mill. The mill complex requires a direct application rate of approximately 18,500 gpm of water, which reduces to a net requirement of 7500 gpm when conventional cascading and recycle without cooling is practiced. Water is used for indirect cooling of the mill motors and auxiliaries, for direct cooling during the blooming and billet rolling operations and to flush the flumes under the mill to prevent build-up of mill scale in the flume system. Two scarfers are included, one for ingots and one for billets. Clean cooling water is cascaded from indirect cooling to direct cooling applications and flume flushing water is recycled after settling in the roughing or primary scale pits. Water not recirculated to the flumes from the scale pits is filtered and returned to the mill as clean process water or discharged to effluent, depending upon temperature conditions on the mill.

A roughing scale pit is located adjacent to the blooming mill for removal of coarse scale particles. A typical roughing mill scale pit is shown in Figure 2. The pit is circular in cross-section and relatively deep in order to accommodate the flumes which usually discharge from the mill by gravity and to provide storage for settled mill scale prior to cleaning. The flow is discharged into the pit through a special influent nozzle oriented in such a way as to produce a circular motion of the entire pit contents. Scale particles settle to the side and down to the bottom of the pit where they are cleaned periodically by a clamshell bucket. The liquid phase is displaced inwardly and up to the top of the pit where it leaves by way of a peripheral launder. Usually, an oil skimming device is provided in order to remove free-floating oils at this point. Typical detention time in roughing pits is five to ten minutes and surface overflow rates in the order of 10 gpm per square foot are utilized. Provision is made to store several hundred tons of settled mill scale in the pit between cleanings. Flow from the roughing pit is discharged by gravity or is pumped to a secondary scale pit or directly to a filter plant, depending upon the application and the design parameters used in the roughing pits.

Important considerations in the design of rougher pits are the flume systems in the mill, the manner in which the flumes discharge into the pit, and the pit hydraulics. Flumes must have sufficient hydraulic gradient to prevent deposition of larger scale particles--1/2' to 5/8" per foot is common--and materials of construction must be used to resist

wear and erosion of the flumes by sharp, angular pieces of scale moving at velocities of 10 to 12 feet per second. Good practice includes a screening box or basket in the flume system or entrance to the pit to screen out crop ends, larger pieces of scale, and tramp solids that may find their way into the flumes.

A primary scale pit is located adjacent to the billet mill area to remove coarse billet mill scale and oil prior to recycle or filtration. A typical pit arrangement is shown in Figure 3. Scale settles to the bottom of the pit and oils and greases float to the surface for removal.

Mechanical equipment is usually provided to rake settled scale particles to the inward end of the pit and to skim oil to the effluent end. A very important additional function is to provide a means to settle the backwash solids and oils which are removed in the filtration plant. Careful attention to the methods by which the backwash solids, scale solids and oil are separated in the primary pits is required in order to remove these materials from the system and prevent recirculating loads of solids and oil from building up in the treatment process.

Three parameters require consideration in the design of the primary scale pit; hydraulic design, scale removal equipment, and provision for backwash return to the pit. Proper hydraulic design of the influent and effluent structures is important in order to obtain satisfactory removals. The flow should be evenly distributed across the widths of the influent area and baffled so that hydraulic short-circuiting is minimized. Similarly, the effluent should be collected in an appropriate weir system and discharged into the pump well for pumping to the filter plant. It is recommended that provision be made for positive movement of the settled scale to the storage area at the head end of the pit for removal by clamshell bucket to a drying pit or directly to railroad cars for ultimate disposal. Oil baffles should be provided and provision should be made for positive removal of free-floating oils from the pit surface. Backwash water can be returned to the head end of the scale pit where it is carefully distributed into the settling area so that the agglomerated solids will not be disbursed. Detention time is commonly around twenty minutes and the surface overflow rates in the area of 5 gpm per square foot are conventional practice. Provision should be made for storing settled scale

prior to cleaning.

Effluent from the scale pits is recirculated to the mill for flume flushing or is pumped to the filtration plant for final treatment. A typical filter plant arrangement is shown in Figure 4.

The function of the filter plant is to remove the suspended solids and oil which cannot be removed by clarification processes without expensive chemical coagulation. The process is a batch system which operates on a loadings cycle followed by a cleaning cycle where the accumulated solids are backwashed from the filter. Following filtration, the effluent is of high quality and can be reused for most mill uses or can be discharged as effluent. In the case of reuse or where stringent thermal effluent criteria apply, it may be necessary to cool the filtrate by passing over cooling towers. In recycle systems and in certain other instances, it may be necessary to adjust the water chemistry during filtration to maintain water stability and prevent incrustation or precipitation in the filter units.

Several design considerations are important when laying out the filter plant. Either pressure or gravity systems may be used, but pressure systems are the most common and provide several advantages. A higher working pressure can be used with a pressure system and backwash storage and pumping facilities can be eliminated.

Determination of filter rate must be made based on past experience or pilot plant determinations. For mill scale filtration, rates in the range of 6 gpm per square foot to perhaps 18 gpm per square foot are feasible. At the higher rates, the efficiency of suspended solids removal is dependent upon the filtration rate and a knowledge of the particle size and particle density and the chemical composition is useful when selecting the applicable design filter rate.

Filter media must be selected in conjunction with the design filter rate. The size and depth of media is a primary consideration and other factors of importance are the chemical composition, sphericity and hardness of the media chosen. Mixed media, dual media, and soft media with angular shapes, such as anthracite, should be avoided on this application. The presence of relatively large amounts of oil in the waste to be filtered makes the proper selection of media of the utmost importance. Proper depth of media should be considered also, and, on some applications, media

depths as mush as 8' are used in this type of system.

The filter run time between backwashes is determined by the specific loading which can be accommodated in the filter before maximum head loss is reached or breakthrough of the suspended solids occurs in the effluent. Specific loading is defined as the pounds of material which can be removed from the filtrate per square foot of filtration area before backwashing is necessary. The loading depends upon the type of solids being filtered, the particle size and particle size range, the size of media utilized in the filter, and the filter rate.

Specific loadings range from approximately 1 pound per square foot per cycle for voluminous solids (such as biological solids found in sewage treatment plant effluents) to approximately ten pounds per square foot per cycle in certain types of steel mill scale systems. Specific loadings of five to eight pounds are common in the type of system being discussed.

The method of backwashing and the design of backwash system is an integral part of any deep-bed filtration system. Solids penetrate deeply into the bed and must be adequately removed during each backwashing or problems will develop within the filtration system. The Dravo Deep-Bed Filtration System uses an air-water backwashing scheme with emphasis placed upon the proper combination of air and water rates. Air is utilized to agitate each of the media grains one upon the other and to scrub the accumulation of suspended solids and oil from the surface of the sand grains. Water is applied to flush the freed solids from the system and to remove any entrapped air at the end of the backwash cycle. A minimum water rate is used to avoid expanding the media bed and placing the individual sand grains in "teeter". Bed expansion is maintained at a maximum of ten percent so that sand grains will remain in close proximity resulting in a violent agitation and scouring effect. This type of backwashing is necessary for dependable, long-term filtration of oil and mill scale waters. A complete backwash cycle requires approximately thirty minutes from the time a filter is removed from service until it is put back on the line. An initial heavy surge of solids is flushed from the filter at the beginning of the backwash cycle after which the solids concentration of the backwash water trails off to essentially the same quality as the filtrate.

Backwash water can be re-cycled to the primary settling units or can be handled in separate disposal equipment. Agglomeration takes place during the filtration process and if the backwash water is removed from the filter and transferred to the settling units it is possible to remove it in the primary settling units. Provision for feeding polymer to the backwash water is common practice and is sometimes required to maintain the primary scale pits in good condition during the backwash. Separate backwash facilities may include a surge tank or thickener followed by a vacuum filter or disposal to other solids handling facilities. Lagooning of the backwash water is practiced in some installations.

Proper sizing and control of the pumps feeding the various elements of the treatment system is extremely important. Materials handling type pumps are recommended for the primary and secondary scale water, but filtrate may be pumped with conventional clean water pumps. Large pumps with several hundred horsepower motors are usually required and the control systems used with the pumps are important. Variable speed pumps with eddy current drives or similar speed control devices are used. Constant speed pumps may be used if sized correctly and provided with recirculating control arrangements to minimize the starting and stopping of the large pump motors.

Conventional practice uses a relatively simple instrumentation and control system and provides for completely automatic operation of the filtration plant. Filter units are permitted to "float" on the system and individual rate-of-flow controllers are not required. A program timer regulates the length of filter cycle and determines when individual filter units are taken out of service for backwashing. Backwash functions are programmed automatically, also, and it is not necessary to provide full-time attendance in the filter plant. Loss of head controls over-ride the program timer and institutes backwashing if unusual loss of head occurs. Of course, manual operation can be provided if desired.

SYSTEM OPTIMIZATION

Rapid sand filtration for production of potable drinking water requires an absolute quality of filtrate under all conditions of filter loading and influent quality. This requirement has resulted in the application of very conservative design parameters for potable water filtration systems which have influenced the design of other rapid sand filtration processes. In addition, rapid sand deep-bed filtration is a complicated process which is not readily understood. As a result, it is common

practice to resort to conservative rules of thumb when designing rapid sand filtration systems. However, as studies are made of the filtration removal mechanisms and additional data become available, it is possible to change the art of deep-bed filtration into a partially understood science and apply optimization parameters when designing these systems.

An optimum filter system can be defined as one with a minimum capital and operating cost. Minimum operating cost is usually obtained by filtering a maximum amount of liquid between backwashes. Filtration must be terminated when the available head is dissipated or when an intolerable filtrate quality is obtained. When the maximum available head loss occurs at the same time as the filtrate quality breaks through, we can say that an operating optimization has been reached. This seldom occurs in actual practice, but can be approached if sufficient information is available when designing and laying out the filter system.

Optimum capital cost is obtained when the requisite filtrate quality is obtained with a minimum plant. To do this requires optimizing the amount of media used - considering both size of media and depth of beds, the optimum size of individual filter units, the optimum number of filters, and the optimum interrelation of system components. The use of chemical additives to the backwash or to forward feed in the system must also be considered and the difference in operating cost utilizing chemical additives must be equated to reduction of capital costs with proper allowance made for cost of money, tax burdens, and other considerations. Complete optimization is a very complicated evaluation of several variables and requires precise definition of flow conditions, solids loadings, and filtrate quality requirements. However, with sufficient information and experience, close approximations can be made which will produce satisfactory results under all conditions encountered in the ultimate plant. Pilot plant studies may be required to provide missing pieces of information and it is common practice to perform filter tests in the field under actual plant loading conditions.

Optimization procedures can be illustrated best by reference to an actual problem. Recently, we were presented with the problem of determining the feasibility of deep-bed filtration for removing suspended solids, color, and oil from the waste water from a hot mill rolling silicon and alloy steels. Existing scale pits reduced suspended solids and some of the oil, but the color remaining in the effluent was objectionable in the receiving stream and an improvement in effluent

quality was required. Filterability of the effluent was unknown and little prior experience with similar wastes was available. A pilot plant program was instituted to demonstrate the feasibility of removing the color with deep-bed filters and to obtain requisite design data.

A pilot plant of the type illustrated in Figure No. 5 was set up at the mill and a series of filtration runs were conducted over a period of time. Additional pre-treatment was required ahead of the filter unit and a sedimentation basin was included as part of the pilot plant equipment. The information developed during the test program and evaluation was used as the basis for the full-scale plant, which is now under final design and will go into operation in about 18 months.

The test program is summarized in the following Case History.

CASE HISTORY

OBJECTIVE

The test objective was to determine the feasibility of deep-bed filtration for removing suspended solids, color, and oil from the hot mill waste water from a mill rolling silicon and alloy steels; with the intent of extra-polating the resulting data to a full-scale facility with a capacity of 17,000 gpm.

EFFLUENT CRITERIA

The following information was established regarding final effluent quality:

Color.....Not discernible
Non-Emulsified Oils...Less than 10 mg/l

OPTIMIZATION STUDIES

A series of optimization tests were conducted at various unit flow rates and with different filter media. Polymer additions were investigated and the results compared to those runs without chemical additions.

SAMPLING AND ANALYSIS

Sampling was conducted at one (1) hour intervals on the filter influent and effluent during each filter run. River water, scale pit effluent, and oils were sampled at less frequent intervals (4-6 hours) Filter head loss was recorded hourly.

Analytical testing was done in the laboratory, except where field determinations--such as color--were possible.

RESULTS, CONCLUSIONS, AND RECOMMENDATIONS

1. Figure No. 6 indicates that 98% of the time, the filter influent suspended solids were less than 173 mg/l, and 50% of the time the influent suspended solids were greater than 43 mg/l.

By visual observations, it was concluded that the level of suspended solids would have to be reduced to 10 mg/l or less to eliminate visual color. The relationship developed for color vs. suspended solids indicates 60 units of color equals 10 mg/l suspended solids.

2. Figure No. 7 indicates that the best filtration rate is 14 gpm/ft.2 with media No. 1. The backwash cycle can be regulated at 12 hour intervals.

3. Figure No. 7 indicates that polymer treatment on the influent can raise the allowable filtration rate to 18 GPM/ft.2, but at a reduction in cycle time to eight hours.

4. The best economic choice is 14 gpm/ft.2 with no forward-flow treatment.

5. Figure No. 8 indicates that allowable specific loadings increase with decreasing sand size for a given unit flow rate. Also noted is that polymer usage may decrease allowable specific loading for a particular sand size.

For a given media, allowable specific loading increases with decreasing unit flow rates.

At 14 GPM/ft.2, the specific loading is 5.4 lbs. solids/ft.2/cycle for the No. 1 media. This would appear to be the optimum filtration rate consistant with the assigned clarity of 60 units of color.

6. Figure No. 9 indicates that the percentage of oil removal in the filter decreases with increasing unit flow rates. Polymer addition seems to enhance oil removal in the filter. At 14 GPM/Ft.2, at least 65% of oil removal should be realized in a full-scale system. Figuring an average of 28 mg/l oil entering the filter, the filtrate should contain less than 10 mg/l.

7. The pre-treatment tank removed an average of 29% oil prior to filter entry. Detention for this tank was 8.3 minutes at a rise rate of 4.3 GPM/ft.2.

The design of the full-scale pre-settling and skimming tanks should remain at 4.3 GPM/ft.2; however, detention may be decreased from 20 minutes to 16 minutes, which results in a side water depth of 9 feet.

8. The proposed full-scale filtration system should be designed for:

Six (6) 16'-6" diameter filters, or
Ten (10) 12'-6" diameter filters---
whichever is the best economic alternate.

9. Dissolved iron and pH appeared to pose no problems to filter performance or filtrate quality.

CONCLUSIONS

1. Deep-bed filtration can be defined as a rapid-sand type filter system where the suspended solids in the influent penetrate the surface of the filter media. Removal of the solids takes place in the voids of the media and not at the media surface. Consequently, the size and depth of the media is a major consideration in the design of these systems.

   Rather arbitrarily, a deep-bed filter system is designated as one which utilizes at least four feet of media to perform the separation function.

2. Because the solids are removed and retained deep within the filter media, efficient backwashing of deep-bed filters is a necessity. Careful attention should be paid to details of backwashing arrangements when selecting specific deep-bed filter systems.

3. A major application of deep-bed filters is in the final treatment of mill scale and oil-laden water from steel mill hot rolling operations. Specific loadings of 5 to 10 pounds of solids per square foot of filter area can be obtained between backwash cycles. Other applications include sewage effluent polishing and process water filtration. Specific loadings of one to five pounds per square foot of media surface can be expected on these applications. In any case, specific loadings depend upon particle size, particle density, filter rate and media size.

4. Consideration must be given to the type and amount of pretreatment ahead of the filters, the method of handling backwash water, the storage and removal of settled solids, and the pumping and control systems in order to insure filtration system performance. When installed and operated properly, deep-bed filters will produce a high quality filtrate suitable for reuse on the mill or for discharge to receiving waters.

5. Deep-bed filtration systems can be optimized to perform at minimum capital and operating cost, provided sufficient information is available to define all of the system variables. Pilot plant tests can be used reliably to obtain requisite data for optimizing full-scale systems.

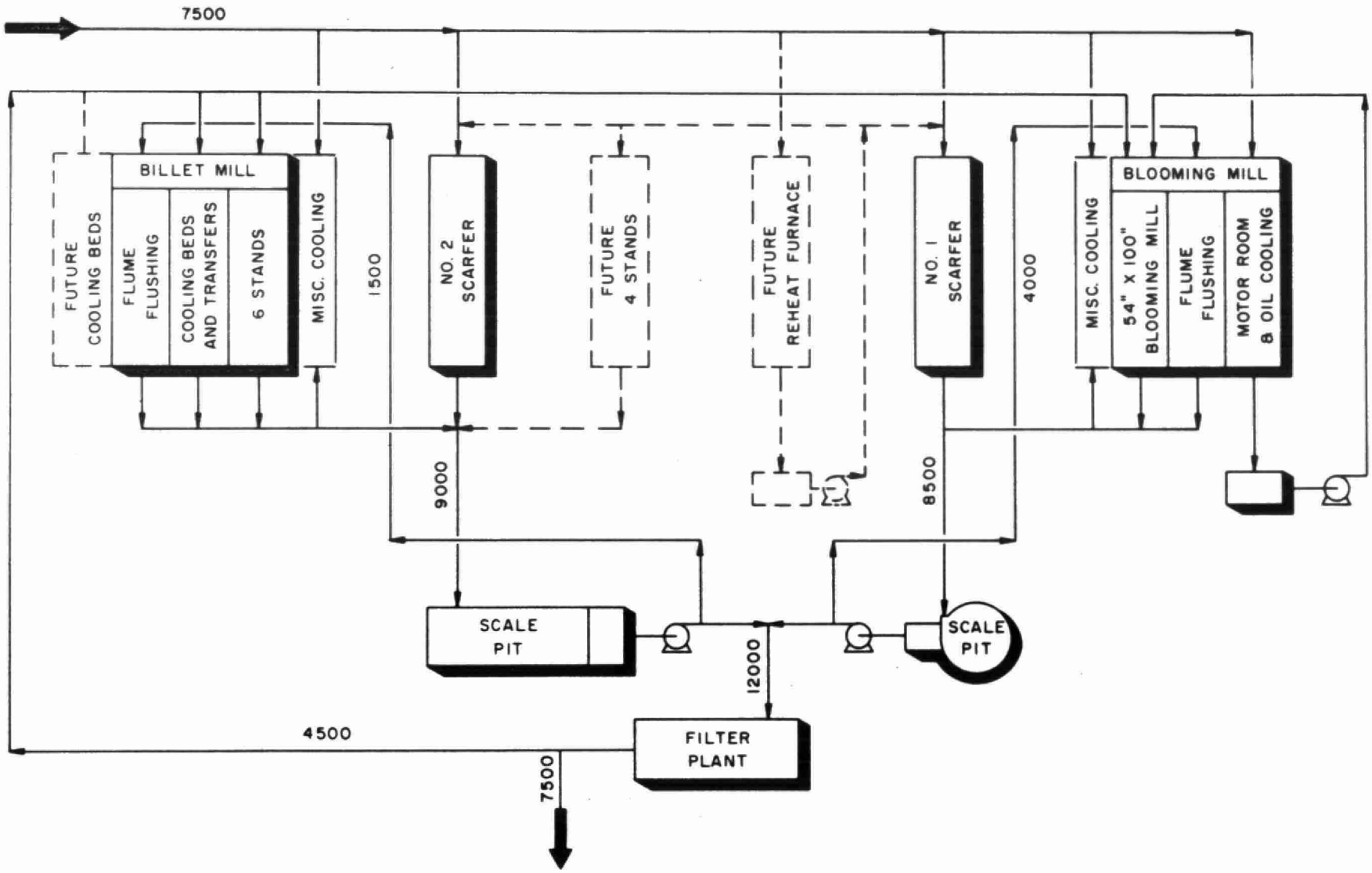

FLOW DIAGRAM - TYPICAL TREATMENT ARRANGEMENT FOR A BLOOMING AND BILLET MILL

Fig. No. 1

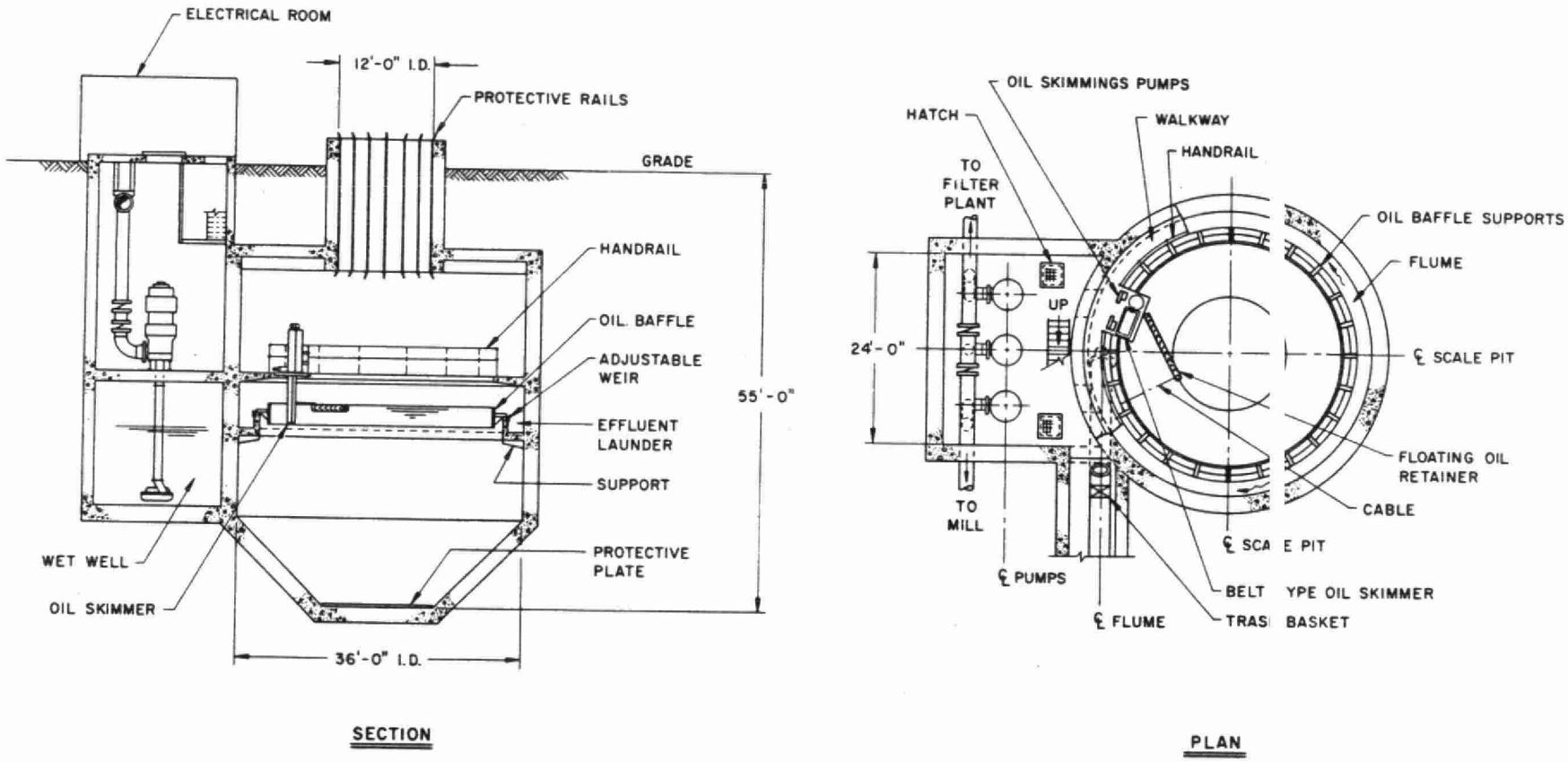

CIRCULAR SCALE PIT

Fig. No. 2

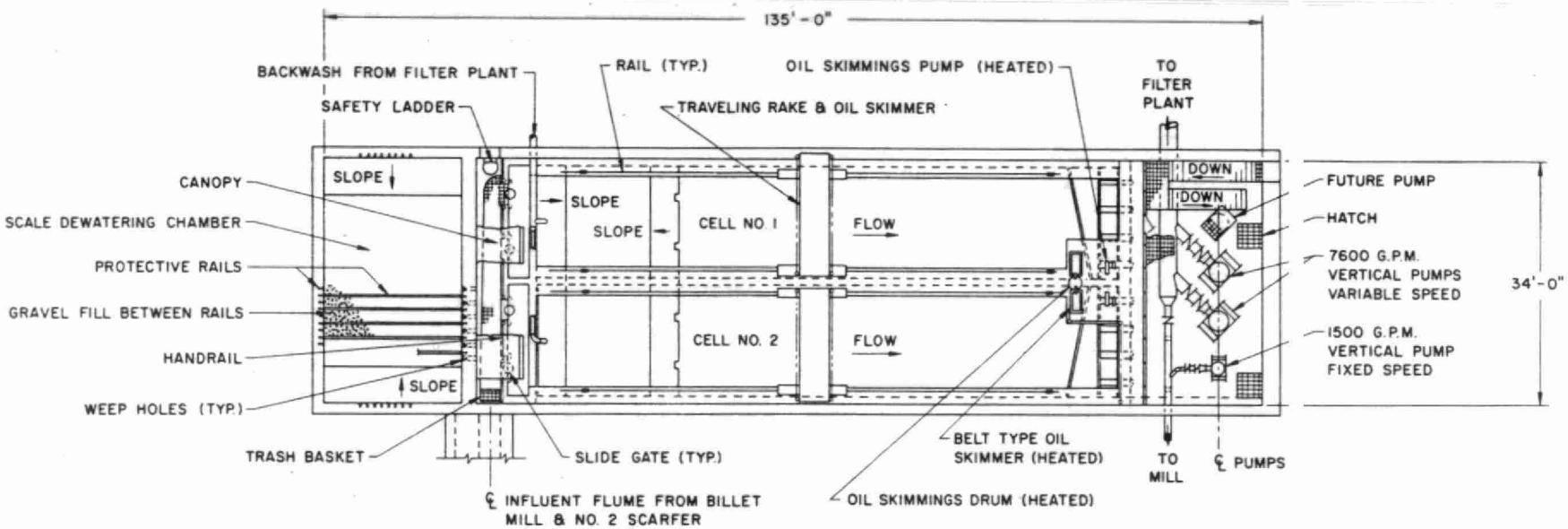

PLAN

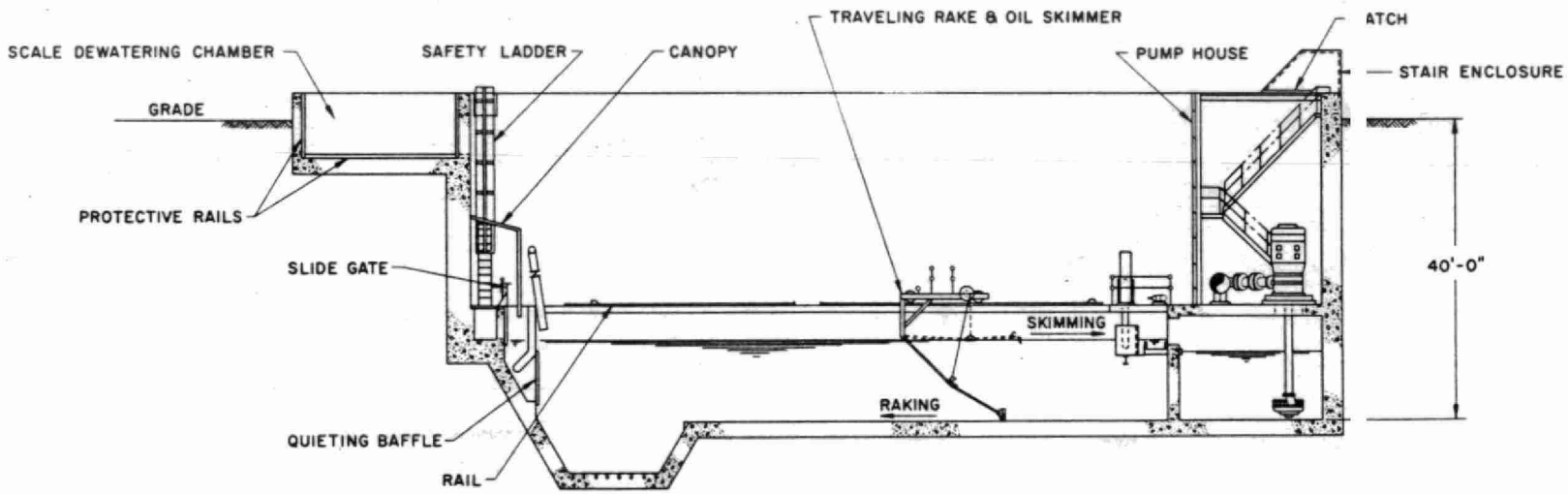

SECTION

PRIMARY SCALE PIT

Fig. No. 3

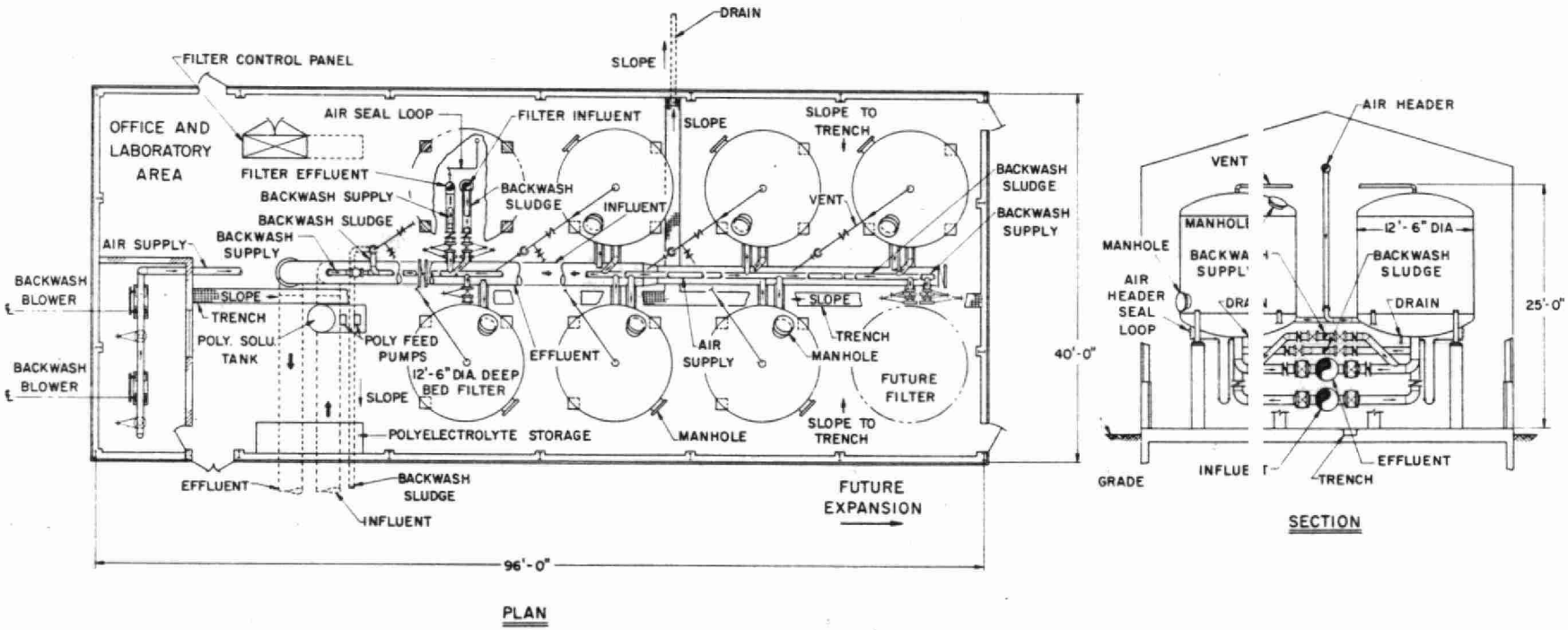

FILTER PLANT

Fig. No. 4

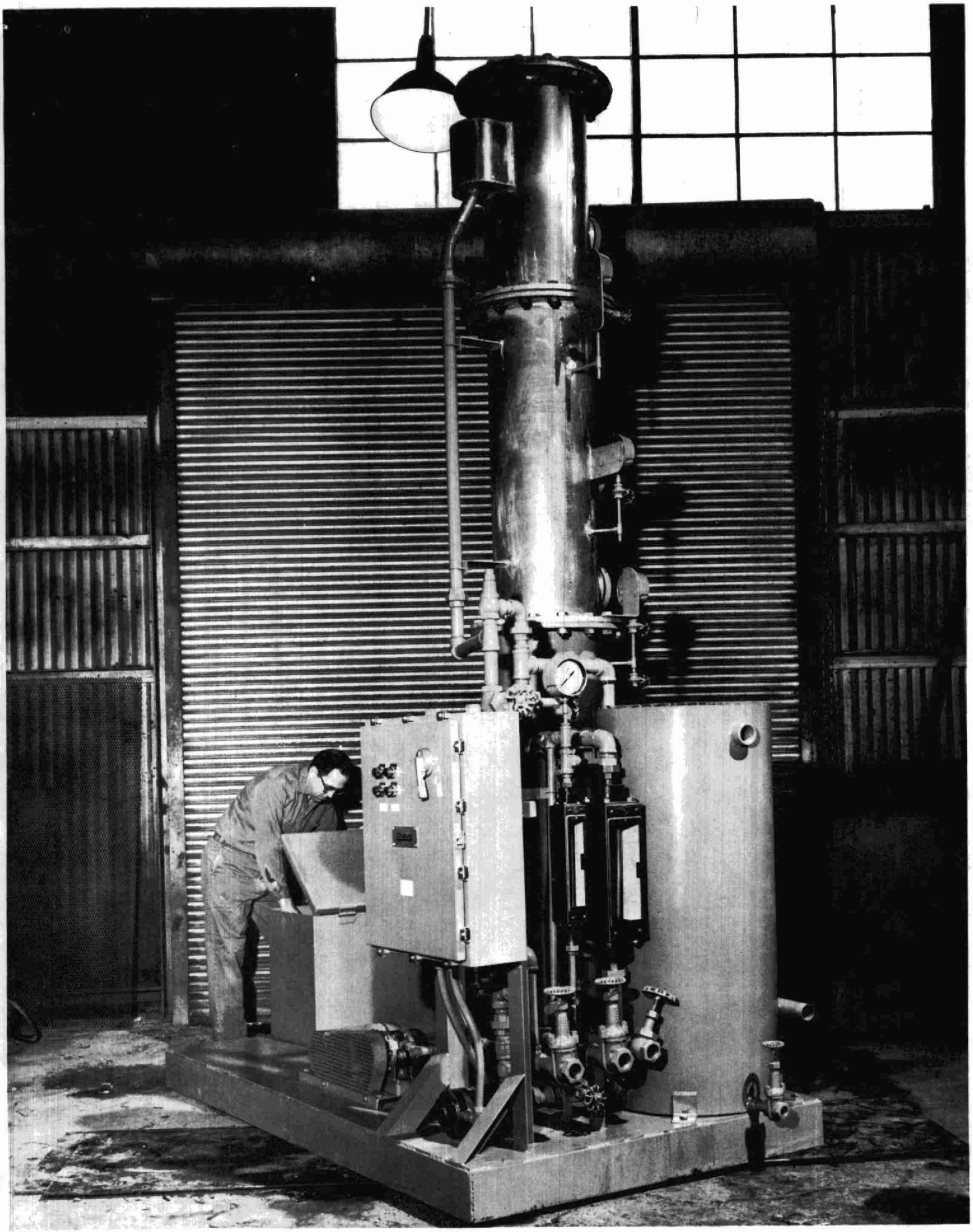

Fig. No. 5

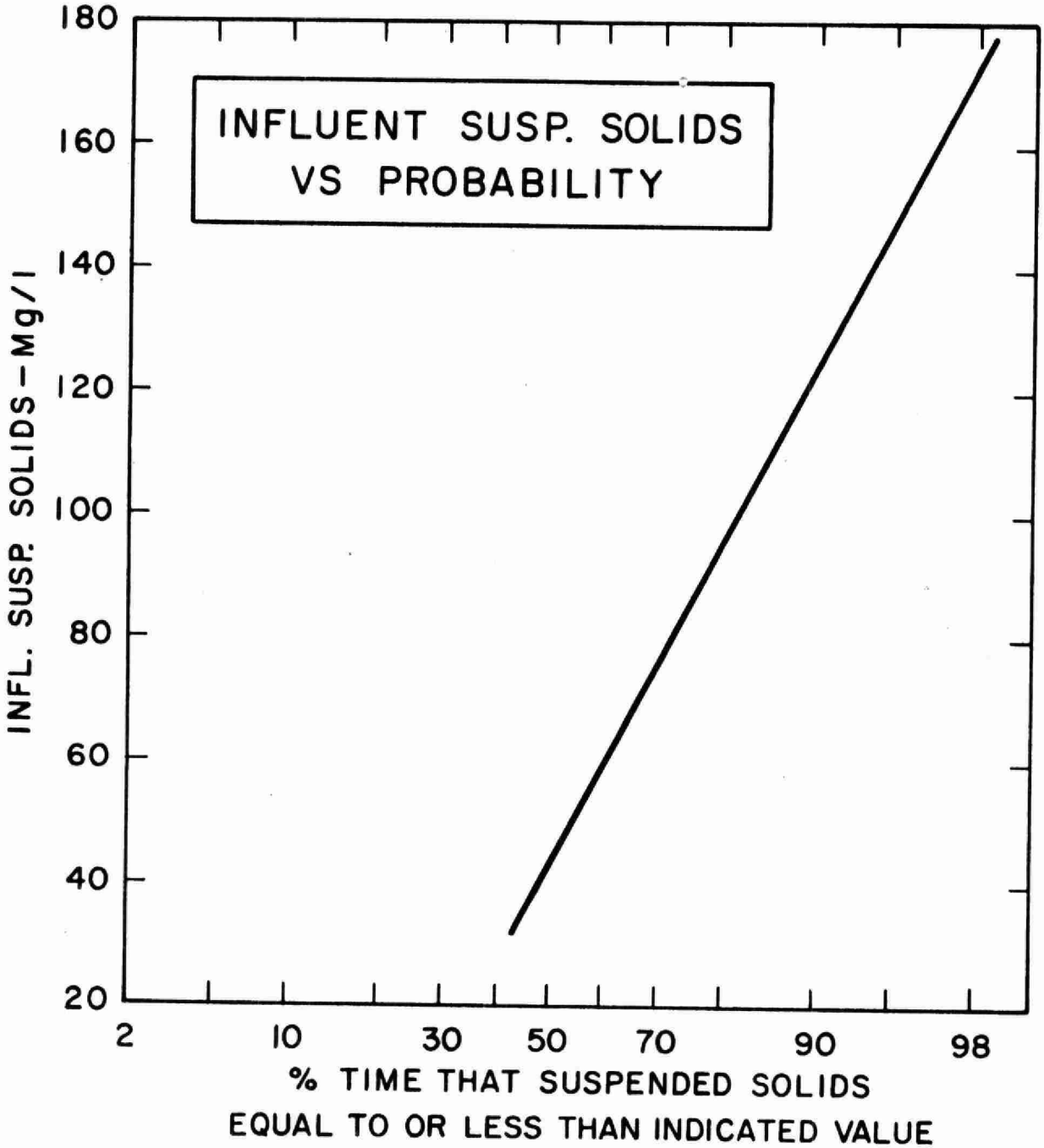
INFLUENT SUSP. SOLIDS
VS PROBABILITY
INFL. SUSP. SOLIDS – Mg/l
180
160
140
120
100
80
60
40
20
2
10
30
50
70
90
98
% TIME THAT SUSPENDED SOLIDS
EQUAL TO OR LESS THAN INDICATED VALUE

Fig No. 6

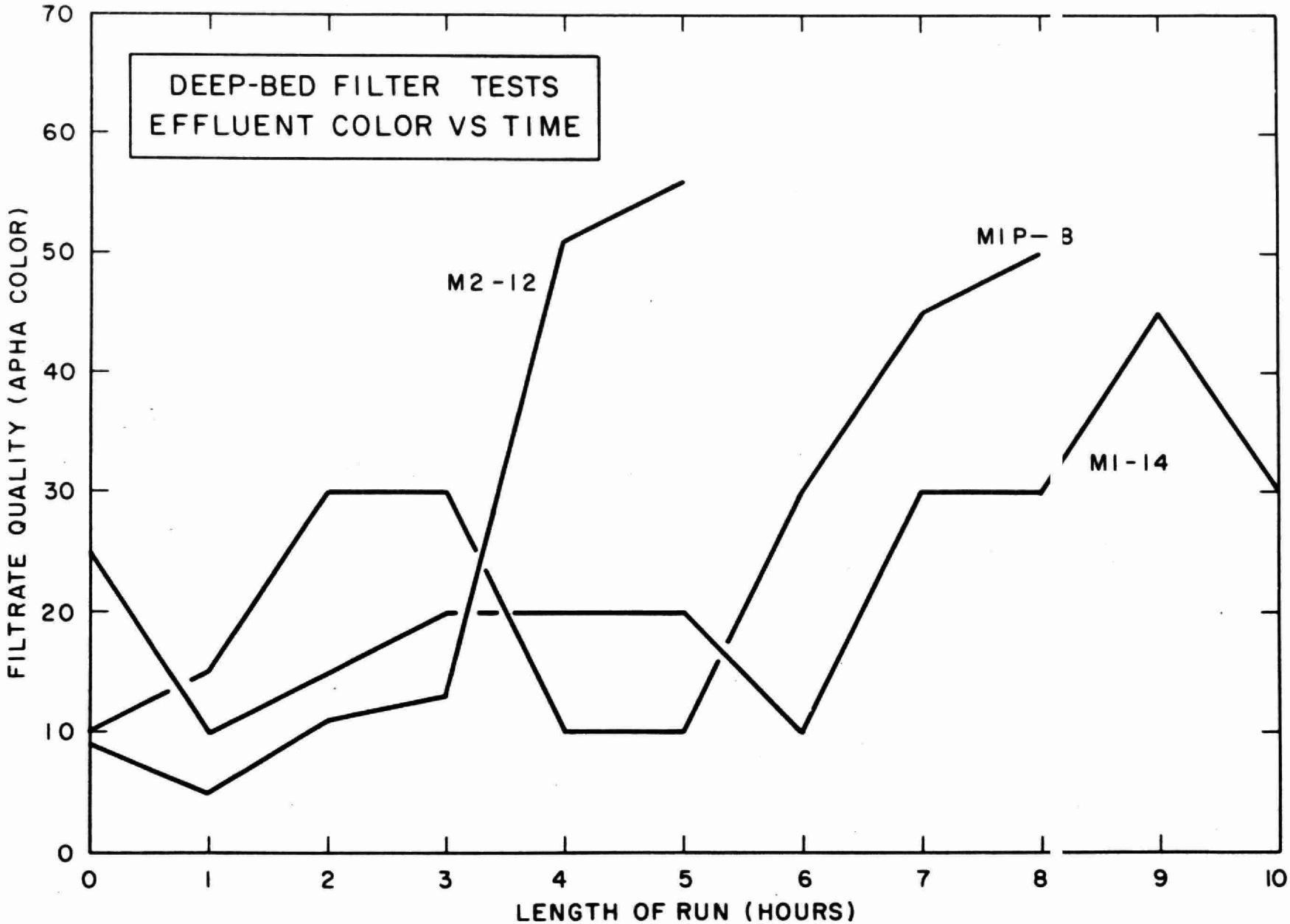
DEEP-BED FILTER TESTS
EFFLUENT COLOR VS TIME
FILTRATE QUALITY (APHA COLOR)
LENGTH OF RUN (HOURS)
M2-12
M1P-B
M1-14
0
10
20
30
40
50
60
70
0
1
2
3
4
5
6
7
8
9
10

Fig. No.7

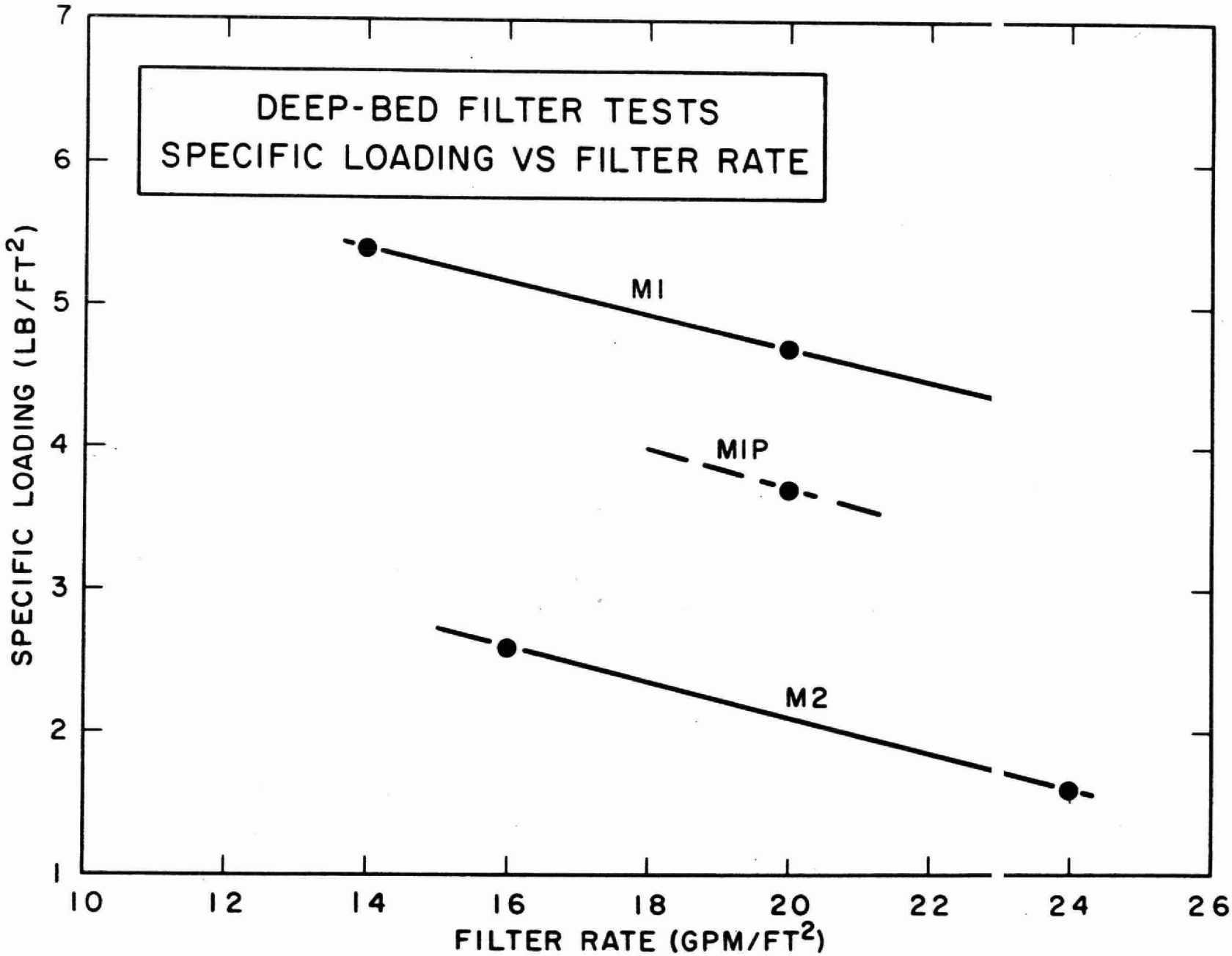
DEEP-BED FILTER TESTS
SPECIFIC LOADING VS FILTER RATE
SPECIFIC LOADING (LB/FT^2)
FILTER RATE (GPM/FT^2)
M1
MIP
M2
1
2
3
4
5
6
7
10
12
14
16
18
20
22
24
26

Fig. No.8

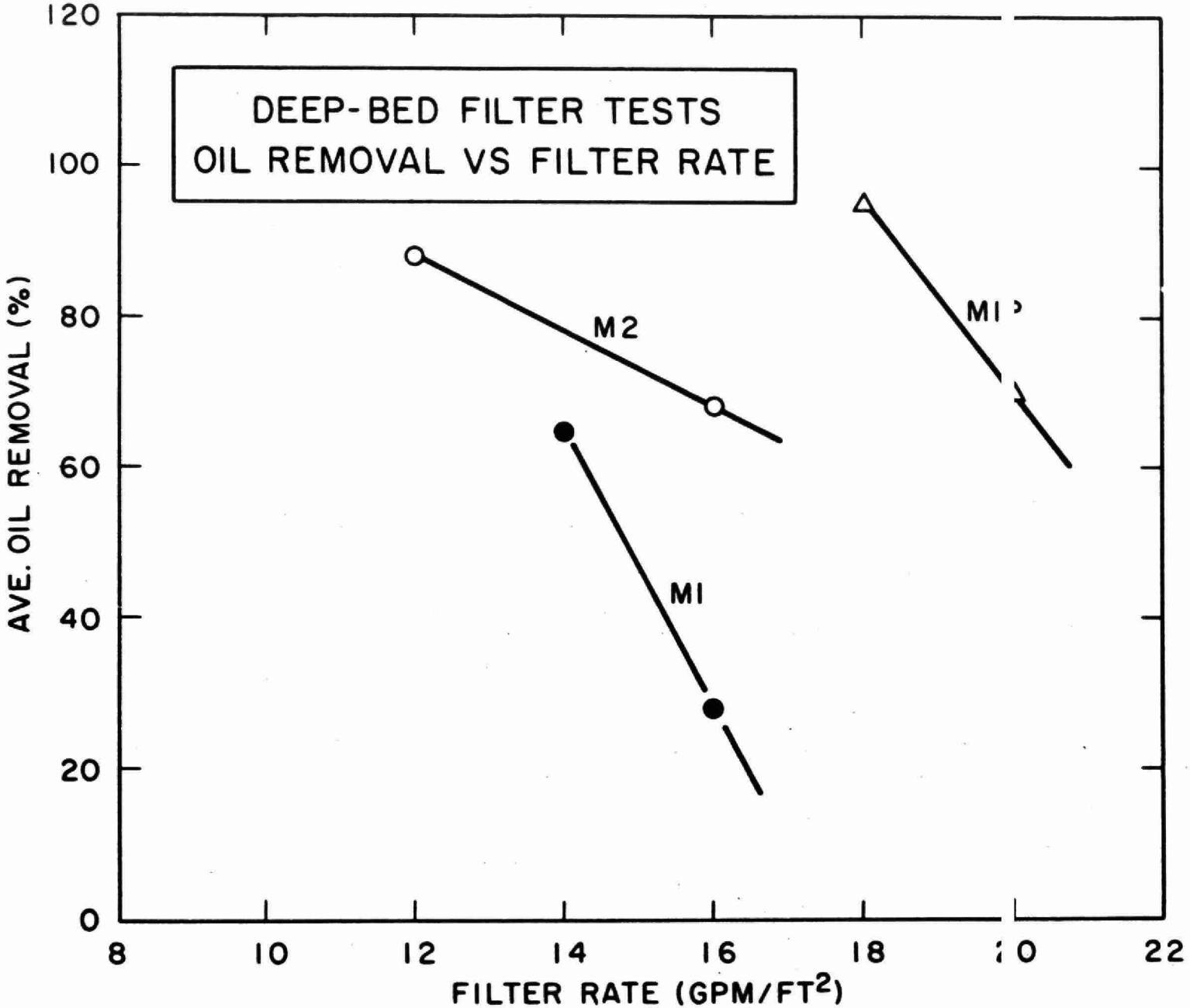
DEEP-BED FILTER TESTS
OIL REMOVAL VS FILTER RATE
AVE. OIL REMOVAL (%)
FILTER RATE (GPM/FT2)
M2
M1
M1
0
20
40
60
80
100
120
8
10
12
14
16
18
20
22

Fig.No.9

"BIOLOGICAL SURVEY OF THE EFFECTS OF URANIUM MILLING WASTES ON THE WATER QUALITY OF THE SERPENT RIVER BASIN"

BY

N. CONROY, BIOLOGIST,
ONTARIO WATER RESOURCES COMMISSION,
TORONTO, ONTARIO.

FOREWORD

A paper was presented at the 1968 Industrial Waste Conference which outlined the methods utilized in the biological evaluation of water quality in the province [1]. This presentation illustrates the application of many of those methods to a specific survey - the biological evaluation of water quality in the Serpent River watershed.

More detailed information on all aspects of uranium mining and milling pollution in the Elliot Lake and Bancroft areas will be available in an OWRC report which is expected to be available by the fall of 1970.

INTRODUCTION

Early in the history of the uranium mining industry in Ontario, it was recognized that a potential hazard to water quality existed where milling wastes had gained access to a watercourse. Reconnaissance surveys of the Elliot Lake area [2] indicated that the observed levels of radioactivity in the river basin represented an important environmental contaminant and that pollution from the uranium milling industry appeared to be detrimental to aquatic life in the affected watersheds.

The OWRC, in co-operation with the Ontario Department of Health, initiated a three-year program to evaluate the problem in terms of the alterations in water quality and the related effects on the aquatic biota.

It was necessary to: 1) determine if significant differences in aquatic productivity existed between polluted and reference waters; 2) evaluate the impact of any observed differences on the biological community, including the population dynamics of fish; 3) differentiate the components of the wastes which might be responsible for any observed changes and 4) determine the levels of radionuclides in the biota, the significance of the concentrations and the validity of using selected taxa to monitor radioactive pollution.

The significance of radioactivity as a contaminant is not considered in this paper. Although the survey demonstrated that substantial levels of radioactivity were accumulated by particular segments of the aquatic biota, there was no indication that such uptake was adversely affecting aquatic populations. Detrimental effects on aquatic production could entirely be accounted for by the water chemistry changes which had occurred.

DESCRIPTION OF THE STUDY AREA

Figure 1 is a map of the Serpent River basin showing the locations of mine sites in relation to flow patterns throughout the watershed. The Serpent River basin lies approximately halfway between Sault Ste. Marie, Ontario and Sudbury, Ontario, which are situated approximately 100 miles to the west and east,

respectively. The Municipality of Elliot Lake is located on Highway 108, approximately 15 miles north of the Village of Spragge on the north shore of Georgian Bay.

The Serpent River basin covers an area of 492 square miles and the river carries an estimated (mean annual) flow of 615 cubic feet per second.

The lakes in the upper part of the Serpent River watershed, including Dunlop, Quirke, Teasdale, Whiskey, Pecors and others, are typical of lakes in the Precambrian Shield. They are extremely oligotrophic, that is, deep, cold, low in fertility and high in dissolved oxygen. The fish population is largely composed of lake trout, whitefish, cisco and ling. Some warm-water fishes are also present in certain of these lakes, including smallmouth bass and walleye. The lakes in the lower part of the Serpent river basin are more eutrophic, that is, they show greater fertility, are shallower and are more suited for walleye, perch and bass populations.

MILLING PROCESS

Briefly, the extraction of uranium from the ore which is mined in underground operations is accomplished by crushing the ore to a fine powder followed by leaching with strong sulphuric acid. The uranium is separated from the crushed rock by ion exchange and alkali precipitation of uranium oxide. The wastes (tailings), consisting of finely ground rock and substantial amounts of radium and sulphuric and nitric acid, are discharged to disposal areas following neutralization with slaked lime. Radium is precipitated by the addition of barium chloride to the effluent. The pollution in the Serpent River has been caused by incomplete neutralization of the waste and inadequate containment of radium and other radionuclides within the tailings basins.

METHODS

Since pre-operational information on affected portions of the Serpent watershed was not available when the survey commenced, it was necessary to choose reference lakes and streams adjacent to but upstream of major waste discharge points. The data collected from these areas were considered as representative of background conditions from which the degree of alteration in affected areas could be assessed.

Water samples were collected from selected stations on a monthly or bi-monthly basis and were subsequently analyzed at the OWRC laboratory in Toronto. The major determinations completed were total dissolved solids, pH, alkalinity and sulphates. Additional water samples were analyzed by the Ontario Department of Health for radioactivity, including alpha and beta activity and concentrations of radium and uranium.

The abundance of chlorphyll a and zooplankton was investigated in 1968 in Dunlop, Quirke, Teasdale, Pecors and Whiskey lakes by measuring the concentration of chlorophyll a and zooplankton in a vertical column of lake water. Samples for chlorophyll analyses were pumped from a specific depth, filtered and analyzed by spectrophotometry for the concentration of chlorophyll [3]. The results for the columns were integrated and reported as the mean concentration of chlorphyll a per litre.

Samples for zooplankton analyses were pumped and filtered through a plankton net and were preserved in 5% buffered formalin. Later, the samples were identified and enumerated microscopically. Numbers of zooplankters per unit volume of water were recorded.

Gill nets were set in the lakes periodically to sample the fish population. The species, length, weight and sex of all fish captured were recorded. Observations were made on the gonad development of all lake trout obtained. Stream bottom fauna communities were investigated periodically at selected stations along the length of the Serpent River watershed, including reference locations above sources of effluent discharge and in adjacent watersheds. Bottom fauna samples were collected with surber samplers and hand sieves. The invertebrates thus collected were picked, preserved and subsequently were identified microscopically.

RESULTS AND DISCUSSION

A. WATER CHEMISTRY AND RADIOACTIVITY LEVELS

The analyses of water samples indicated that concentrations of sulphates and total dissolved solids were significantly elevated below discharge points and that the increased concentration could be detected

throughout the length of the Serpent River. Alkalinity and pH showed a concomitant decrease. Also, concentrations of radionuclides were significantly elevated in the river downstream of the effluent discharge points. Proximinal to the tailings areas, the radium activity of the receiving waters was elevated above the recommended level of 3 picocuries per litre which has been adopted by the Province. More detailed information on water chemistry and radioactivity levels will be provided in OWRC report on the three-year study.

Figure 2 depicts the relationship between chlorophyll levels and zooplankton density for affected and reference lakes in the Elliot Lake area during the two sampling periods in 1968. The Figure indicates the magnitude of the reduction in chlorophyll a and zooplankton in the lake basins which receive wastes from the uranium milling industry.

If it is assumed that the values for Dunlop Lake in May and August represent the values inherent to the oligotrophic lakes of the upper Serpent River basin, then the corresponding values for chlorophyll a and zooplankton in the polluted lakes expressed as a percentage of the reference lake values provide an indication of the impact of the mine wastes on these waters in terms of primary and secondary production. The comparative values are provided in Table 1, below.

Table 1. Relative index of primary and secondary production in the Serpent River system with Dunlop Lake as reference.

Lake	Period	Chlorophyll a	Zooplankton
Dunlop	May	100%	100%
Quirke	May	65%	50%
Whiskey	May	41%	22%
Pecors	May	30%	6%
Dunlop	August	100%	100%
Quirke	August	13%	7%
Whiskey	August	19%	20%
Pecors	August	7%	7%

Previous studies carried out by the OWRC in which radioactive carbon was used to assess primary productivity revealed a similar reduction of productivity in lakes which were subjected to acid-mine wastes [4].

It is suggested [4] that a deficiency of inorganic carbon is limiting production in the polluted lakes. Low pH in Quirke, Whiskey and Pecors (Figure 3) shifts the aqueous phase equilibrium of inorganic carbon since the solubility of carbon dioxide is reduced as pH decreases, causing carbon dioxide to escape to the atmosphere during lake turn-over and wind-mixing periods. Also, the low pH probably retards the conversion of organic to inorganic carbon in the bottom sediments.

C. Fish Populations

The data on fish populations are based on gill-net sets. Since the efficiency of gill nets to capture fish varies with the season, weather and the specific set, definitive conclusions cannot be made relative to the size and composition of fish populations from records of netting success. Nevertheless, it is most significant to note that the total pounds of fish (all species) is less in the polluted waters than in reference lakes (Table 2) by approximately one order of magnitude.

Table 2. Availability of fish in different areas of the watershed.

Lake	Year	Pounds of fish/100 yards
Quirke	1966	45
	1968	20
Whiskey	1966	40
Pecors	1966	75
	1968	30
Elliot **	1966	500
*Dunlop	1966	400
*Teasdale	1968	100

* reference lakes. Water chemistry results indicate that it has been virtually unaffected.**

A change in the species composition of the fish population was apparent in Quirke, Whiskey and Pecors lakes. The results of the netting surveys suggest that an insignificant population of walleye remained in Quirke Lake by 1966 and that this same species was depleted in Pecors and Whiskey lakes by 1968. Plankton compose a significant proportion of the diet of young walleyes and as was noted in the previous section, the plankton population was greatly reduced. This produced a parallel reduction in the carrying capacity of the affected waters for young walleye and it is not surprising

that this species has virtually disappeared.

The reproductive potential of lake trout was investigated by noting the state of development of gonads. In general, lake trout from age-class 6-8 years dominate the spawning population and sexual maturity is reached when fish reach a length of 20 inches and/or an age of seven years [5]. Table 3 shows the number of lake trout over six years of age and/or 20 inches in length taken from lakes in the Serpent River watershed and the state of maturity of the gonads. All fish were captured in late summer or early fall when advanced gonad development would be expected.

Table 3. Comparative reproductive potential of lake trout in affected and unaffected lakes.

Lake	Number of trout 6 years and/or 20" in length	Number mature
Quirke	14 (1966-67-68)	5
Whiskey	14 (1968)	3
Teasdale	7 (1968)	7

Less than one-third of the lake trout from Quirke and Shiskey lakes were mature although they were of reproductive age. However, all fish of the appropriate age classes from unpolluted Teasdale Lake were sexually mature.

Lakes characterized by low productivity of planktonic organisms have been reported to contain populations of lake trout which are capable of reproducing only every second year [6]. Lake trout appear to be exibiting delayed maturation and interruption of annual spawning behavior in Quirke, Whiskey and Pecors lakes, all of which are characterized by low plankton production.

An evaluation of fish condition was made using the coefficient of condition, one expression of which is simply the weight divided by the cube of the length [7]. Figure 4 illustrates the mean coefficient of condition and the range for various lakes in the watershed. The fish from Quirke and Whiskey lakes are in poorer condition than fish from the reference lakes.

The graph in Figure 5 illustrating the length of the fish as a function of weight shows a similar trend. Fish show a slower rate of weight gain in the polluted lakes.

The poorer condition of lake trout from the polluted waters is related, either directly or indirectly to a reduction in food supply.

Young lake trout are directly dependent on plankton and aquatic invertebrates for food. Older fish utilize invertebrates and shore-dwelling fish in the spring when they frequent shallow water. Deep water fishes such as cisco and whitefish form a large part of the lake trout diet during the summer and early fall when the trout inhabit the deeper waters of the lake. Since the relationship between primary production and production at higher trophic levels is not linear, a certain reduction in primary production will have a greater effect on higher trophic levels. Figure 6 depicts the hypothetical effect in a pyramid of biomasses occasioned by the removal of 50% of dissolved organic matter. Level 3 (fish) has been reduced by almost 100% while the loss to the primary trophic level is slightly less than 50% of the existing level.

D. Diversity of Stream Bottom Fauna

Stream bottom fauna communities (communities of aquatic organisms which inhabit the floor of streams) are delicately attuned to their environment. Measurement of changes in community structure associated with alterations in water quality provide a sensitive device for measuring the impact of pollutional influences. In general, in non-polluted waters the biological community exhibits greater diversity (more taxa) and is not strongly dominated by any one genus or species. As pollution is introduced, the environment becomes restrictive and some sensitive taxa are eliminated, often allowing the more pollution-tolerant forms to proliferate. This response can be assessed by an 'index of diversity' which simply categorizes the particular site of investigation by mathematically relating the number of individuals and the number of taxa. In this study the index of diversity used was $I_D = (m-1)/\log_e N$ and the index was multiplied by a weight factor which gives additional weight to certain

taxa which are better indicators of the water quality affecting that community.* Figure 7 is a schematic flow diagram of the Serpent River indicating the average (approximately eight investigations) weighted index of diversity for selected stream stations.

Table 4 below provides the mean weighted index of diversity (M.W.I.) for the stream stations on the Serpent River basin. The stations in Table 4 are arbitrarily divided into three groups - polluted, intermediate and unpolluted. Correspondingly, Tables 5, 6 and 7 provide water chemistry data for the same stations to facilitate the co-relating of chemical and biological data.

Table 4. Mean weighted index of diversity of stream bottom fauna - Serpent River.

UNPOLLUTED		INTERMEDIATE		POLLUTED	
Station	M.W.I.	Station	M.W.I.	Station	M.W.I.
65-1	9.2	22-1	3.1	26-1	1.9
67-1	8.6	48-6	3.1	24-2	1.3
66-1	7.7	45-1	3.1	42-3	1.3
52-1	7.3	38-1	2.6	37-1	1.3
68-1	6.4	59-1	2.6	29-1	1.1
18-2	5.5	30-1	2.3	40-1	.6
57-2	5.1	60-1	2.3		

The bottom fauna community at reference stations 65-1, 67-1, 66-1, 68-1 and 18-2, had a M.W.I. greater than 5. The two stations most remote from the sources of pollution, 52-2 and 57-2, also had M.W.I. values greater than 5 indicating that the wastes discharged to Serpent River were having no marked effect on the aquatic stream life at these downstream points. The water quality of these stations is shown in Table 5 below:

Table 5. Water quality at non-polluted stations on Serpent River.

	65-1	67-1	66-1	52-1	68-1	18-2	57-2
pH	6.9	7.0	6.9	6.6	6.4	6.9	6.4
Sulphates	9	8	7	81	7	10	68
Hardness	17	15	26	92	15	18	76
Nitrates	.1	.05	.08	1	0.1	0.5	1.2
Tot. diss. solids	49	42	47	168	44	45	133

Note: All values except pH are expressed in Milligrams per litre.

*Additional information is presented by Conroy, 1970. 8

The most dramatic effect of the discharges is seen in the community structure of the stations at the inlet and outlet of Quirke Lake; the inlet is Whiskey Lake and the inlet to Pecors Lake at 37-1, as well as the streams carrying the tailings overflow from Nordic Mine (40-1) and from the abandoned tailings area at Nordic Mine (42-3).

The water quality at these stations is shown in Table 6 below:

Table 6. Water quality at polluted stations on Serpent River.

	26-1	24-2	42-3	37-1	29-1	40-1
pH (lab)	5.8	6.3	4.2	5.6	5.7	4.9
Sulphates	94	143	121	208	82	1079
Hardness	99	144	111	217	91	162
Nitrates	2.4	3.1	.19	2.3	2.5	9.8
Tot. diss. solids	178	271	238	366	161	2075

Note: All values except pH are expressed in Milligrams per litre.

An intermediate zone is represented by stations 22-1, 48-6, 45-1, 38-1, 59-1, 30-1, and 60-1. At these stations, the effect of the pollution is apparent but not as dramatic as in the 'polluted' zone.

The water quality at these stations is presented in Table 7 below:

Table 7. Water quality at intermediately polluted stations.

	22-1	48-6	45-1	38-1	59-1	30-1	60-1
pH	6.1	6.6	4.8	6.0	5.8	5.6	6.4
Sulphates	219	28	84	95	31	75	142
Hardness	186	36	82	106	32	84	159
Nitrates	2.5	.44	.14	1.8	.20	1.9	.27
Tot. diss. solids	341	84	168	188	65	152	288

Note: All values except pH are expressed in Milligrams per litre.

Figure 8 is a graph of the M.W.I. as a function of pH, sulphates, nitrates and total dissolved solids. Interpretation of this graph at the ordinate value of five provides minimum water quality standards which will adequately protect the stream bottom fauna community in the Serpent River. These standards will ensure that the water quality is adequate for domestic, industrial and recreational uses of the water. Table 8 below summarizes these standards.

Table 8. Minimum water quality standards to maintain 'clean water' * in the Serpent River.

pH	6.8 and 8.0
Sulphates not greater than	20 ppm
Nitrates not greater than	1 ppm
Hardness no greater than	25 ppm
Totoal dissolved solids not greater than	75 ppm

Note: All values except pH are expressed in Milligram per litre. *Water which would protect the biotic community structure.

The correlation between certain of the chemical parameters and the index of biological diversity is not always directly apparent. Variability arises since some of the chemical values for the three different pollution classifications mentioned above do not follow the anticipated value for that range. However, a regard for Table 4 indicates that in general a sufficient correlation does exist to allow the foregoing interpretation.

These recommended standards may not be easily reached; however, every effort, including research by the companies involved, should be made to ensure that effluents meet the suggested limits. Some of the parameters need not be controlled since they will fall within limits by control of other parameters. For example, if sulphate discharges are controlled, pH will be elevated and hardness and total solids will be reduced.

CONCLUSIONS

1. The uranium mining industry in the Elliot Lake area has seriously reduced the capacity of the lakes in the upper part of the Serpent River basin

to support life. This has retarded the potential multiple use of the waters of the upper Serpent River basin.

2. The most significant factor is the reduction in pH in the receiving waters through the release of chemicals, especially sulphuric acid, associated with the uranium milling processes. The reduced pH has resulted in a deficiency of inorganic carbon and a concomitant limitation on primary productivity.

RECOMMENDATIONS

1. The pH of tailings effluents at the point where they enter the receiving water (monitoring point) should be 6.8 - 8.0.

2. The operating mining companies should install automatic monitors at the outfall of their tailings areas and the effluents at these locations should be monitored for pH and dissolved and suspended solids to ensure compliance with the objectives stated in this report.

3. The mining companies should investigate all possible means of returning the lakes in the upper Serpent River to a satisfactory pH condition. Additions of lime and/or organic materials should assist towards neutralizing the reduced pH and offsetting the inorganic carbon deficiency that has resulted from mining activities.

4. Based on the empirical relationship between water chemistry and biological conditions, a set of standards for poorly buffered waters receiving mine wastes should include the following limits:

   -pH between 6.8 and 8.0
   -sulphates not greater than 20 ppm
   -nitrates not greater than 1 ppm
   -hardness not greater than 25 ppm
   -total dissolved solids not greater than 75 ppm

REFERENCES CITED

1. Schenk, C. F., 1968. Biological aspects of water quality management in Ontario. XV Ontario Industrial Waste Conference.

2. Caplice, D. P., and J. H. Neil, 1964. A reconnaissance survey of radiological pollution in the Elliot Lake and Bancroft areas. Ontario Water Resourves Commission.

3. Bridges, T. G., 1968. Chlorophyll analysis. Internal report, Ontario Water Resources Commission.

4. Johnson, M. G., M.F.P. Michalski and A. E. Christie, 1969. Effects of acid mine wastes on phytoplankton communities of northern Ontario Lakes. Ontario Water Resources Commission.

5. MacKay, H.H., 1963. Fishes of Ontario. Ontario Department of Lands and Forests.

6. Miller, R.B. and W. A. Kennedy, 1948. Observations on the Lake Trout of Great Bear Lake. J. Fish. Res. Bd., Can. 7(4).

7. Lagler, K.F., 1956. Freshwater biology. Brown, Dubuque, Iowa.

8. Conroy, N., 1970. A modified index of ecological diversity applicable to pollution evaluation studies. Midwest Benthological Society, 18th Annual Meeting, April 1-3, 1970.

ACKNOWLEDGEMENTS

The author expresses his appreciation to Mr. F. A. Voege, Assistant General Manager and Mr. C. F. Schenk, Supervisor, Biology Branch, Ontario Water Resources Commission, for providing the opportunity to present this paper and their valuable assistance in the preparation and publication of the report.

This paper represents an integral part of an intensive three-year report on water pollution associated with the uranium milling industry in Ontario.

FIG. - I

SERPENT RIVER DRAINAGE SYSTEM

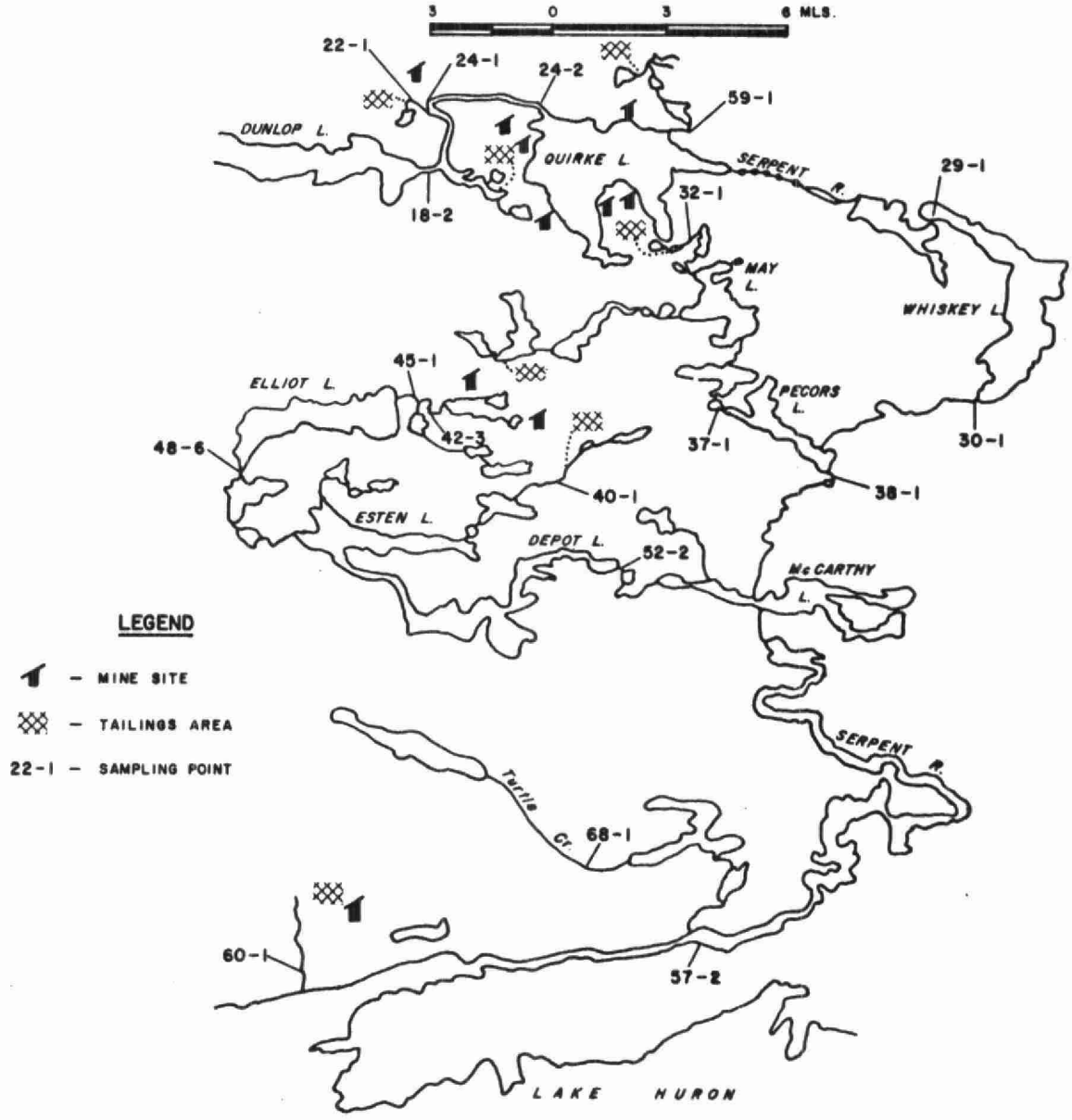

FIG.-2

BAR GRAPH - MEAN CONCENTRATION OF ZOOPLANKTON & CHLOROPHYLL A FOR COLUMN TO DEPTH OF 2 X SECCHI DISC.

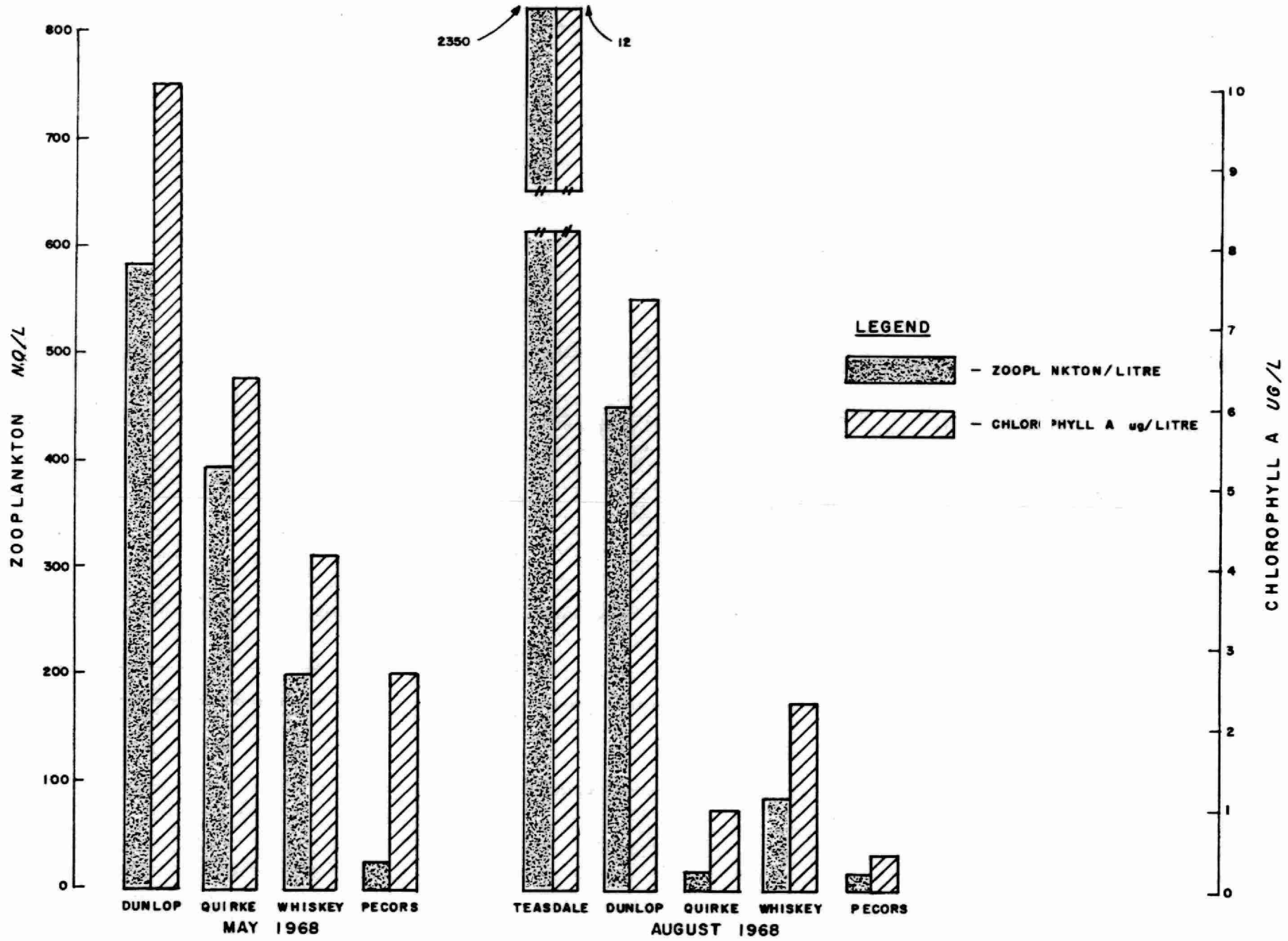

FIG.-3

PROFILES AND SECCHI DISC READING FOR LAKES IN SERPENT RIVER DRAINAGE BASIN

MAY – AUGUST 1968

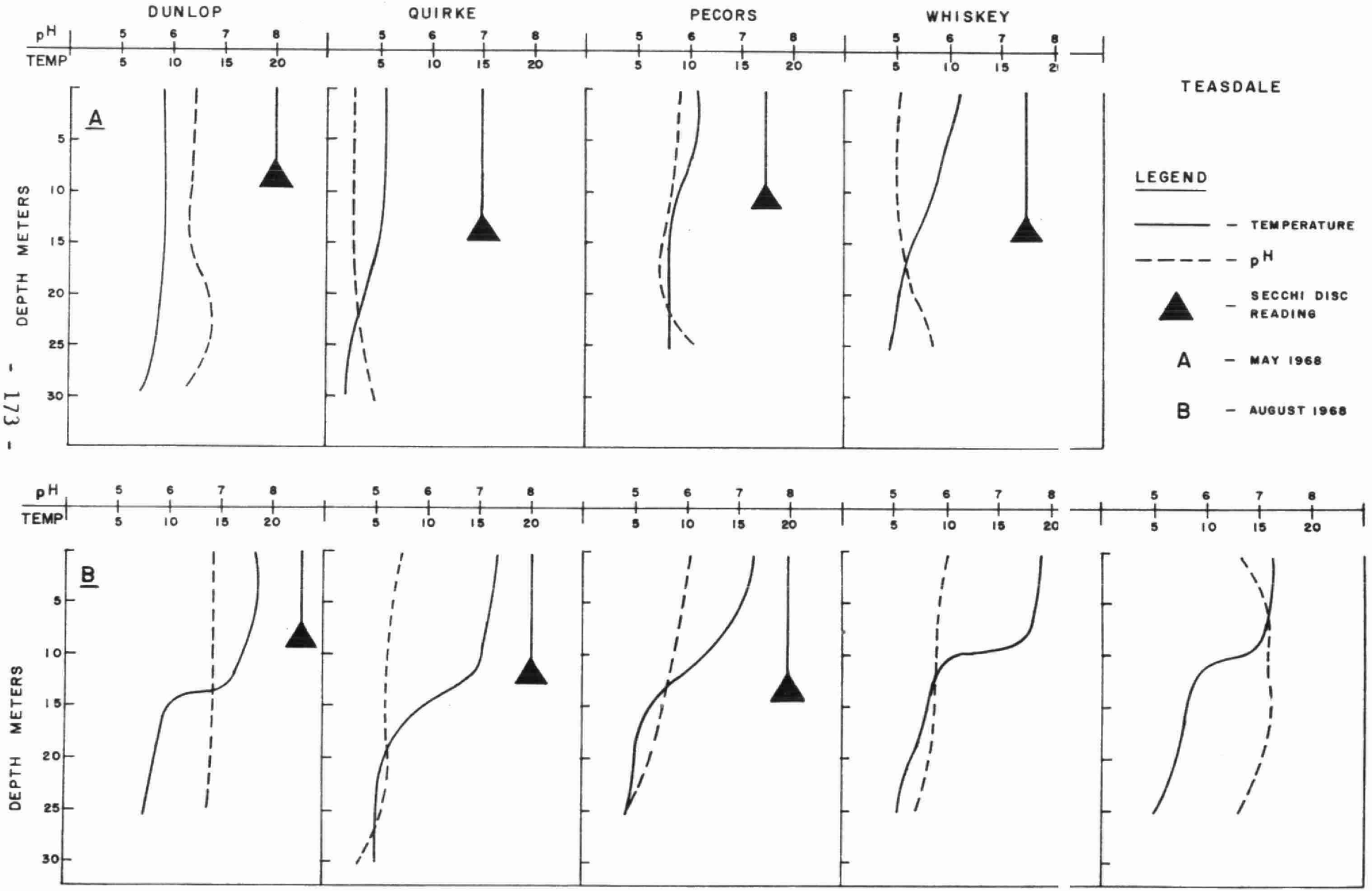

FIG.—4

COEFFICIENT OF CONDITION : $K = W/L^3$ OF LAKE TROUT FROM SERPENT RIVER DRAINAGE BASIN

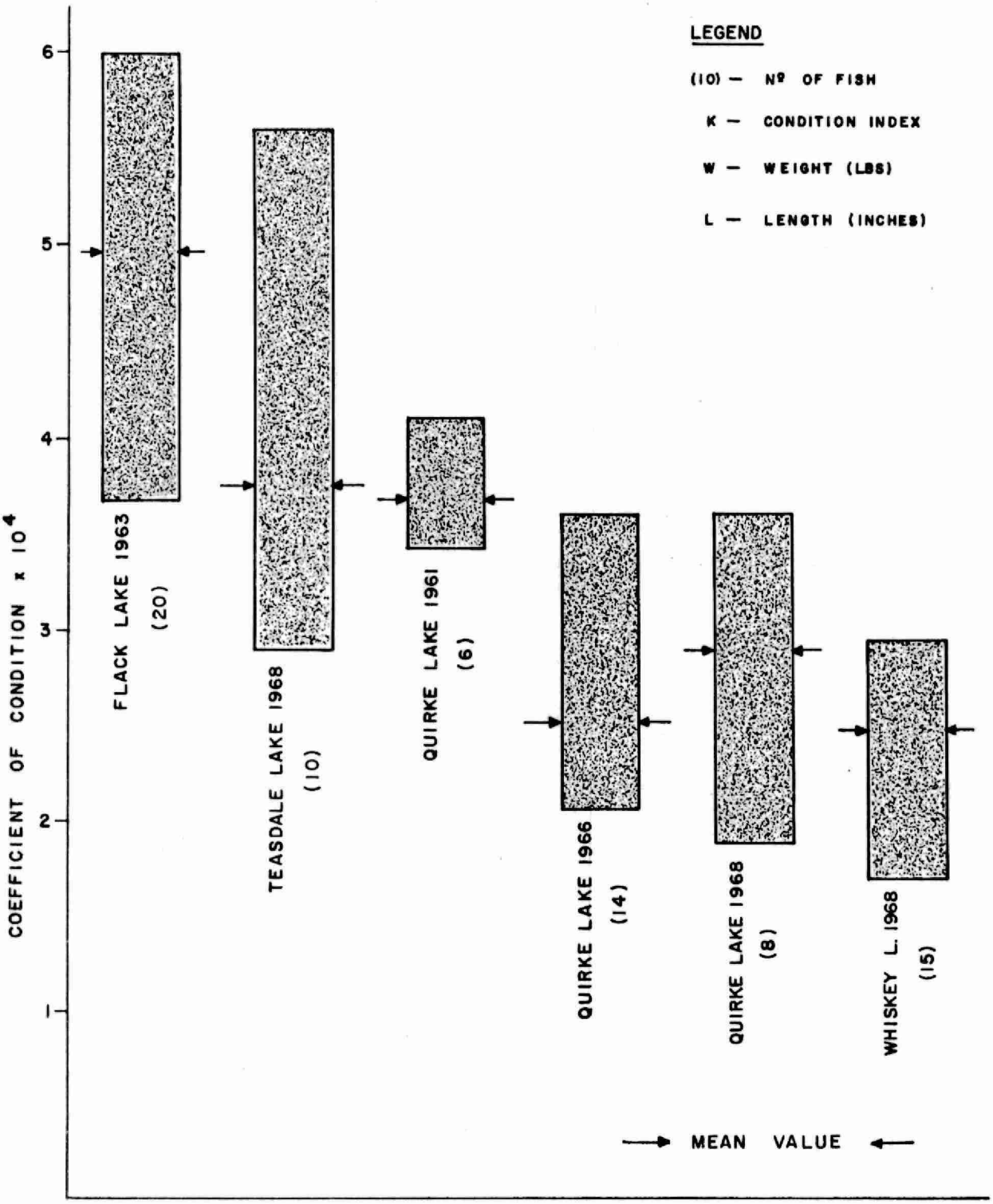

LENGTH & WEIGHT RELATIONSHIPS FOR LAKE TROUT IN QUIRKE, WHISKEY AND TEASDALE LAKES

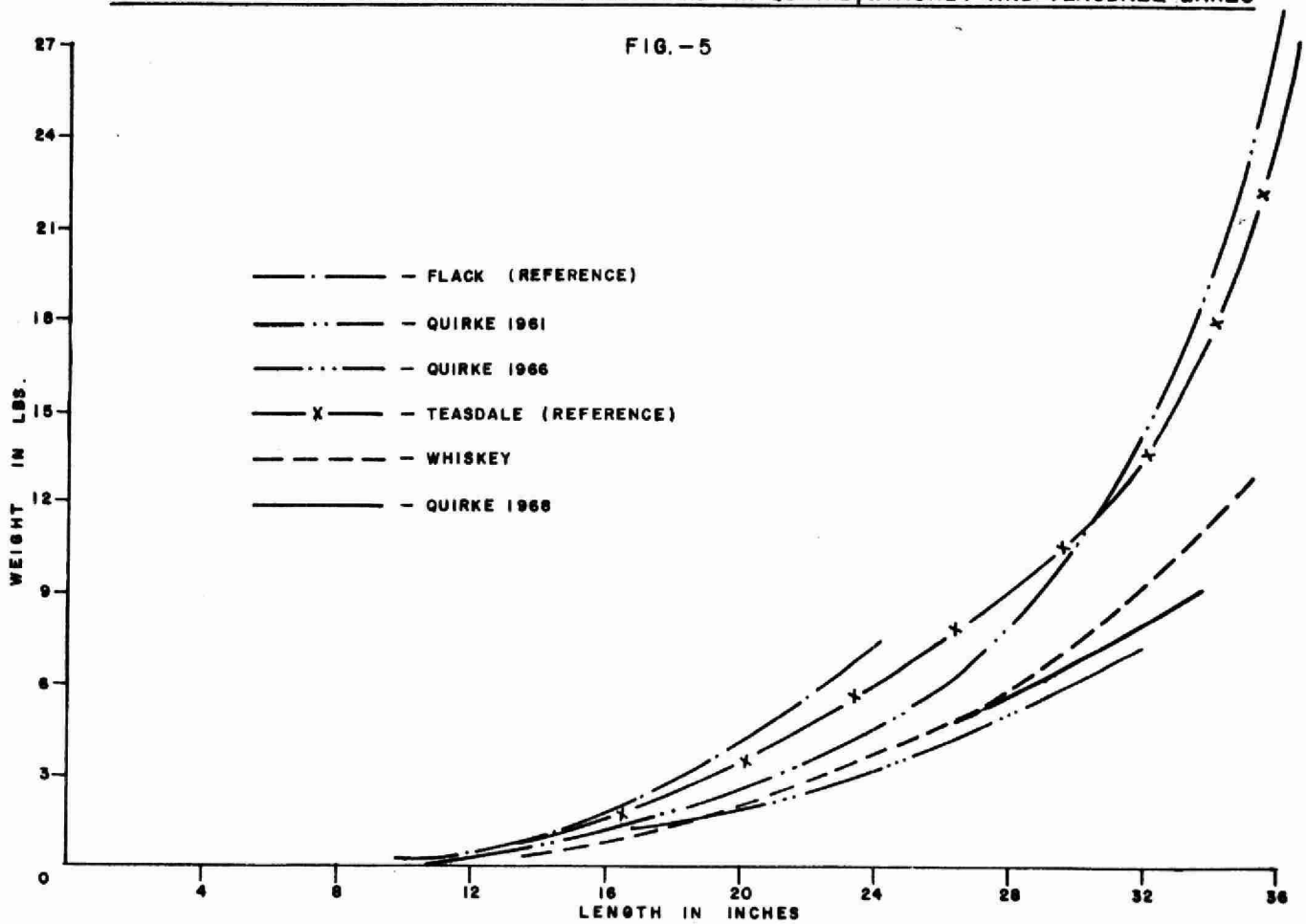

CHANGES IN THE PYRAMID OF BIOMASS FROM A REDUCTION IN DISSOLVED ORGANIC MATTER

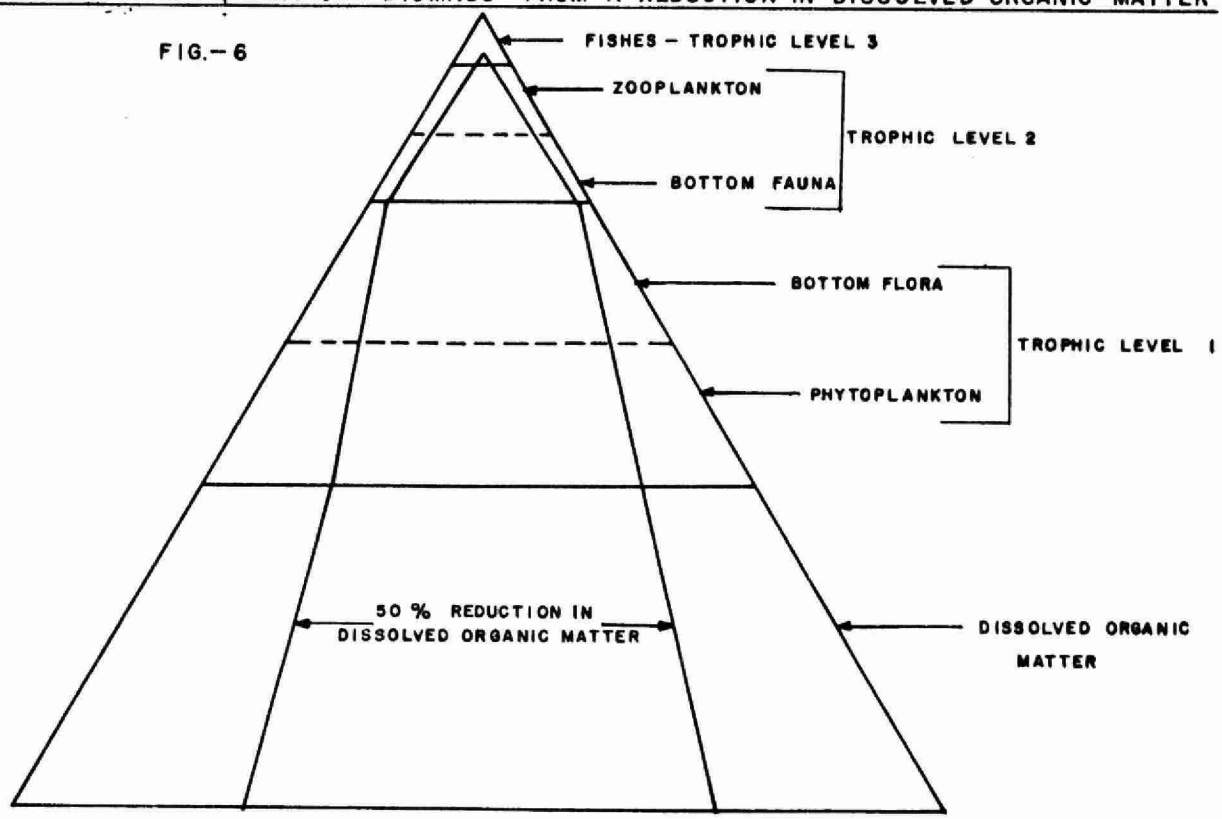

WEIGHT RELATIONSHIPS OF VARIOUS CONSTITUENTS OF WEBER LAKE, WISCONSIN, (AFTER JUDAY) AND THE THEORETICAL EFFECT OF A 50 % REDUCTION IN DISSOLVED ORGANIC MATTER ON THE TROPHIC LEVELS

FIG.—7

SCHEMATIC FLOW DIAGRAM OF SERPENT RIVER BASIN

INDICATING MEAN WEIGHTED INDEX OF DIVERSITY FOR STREAM BOTTOM FAUNA

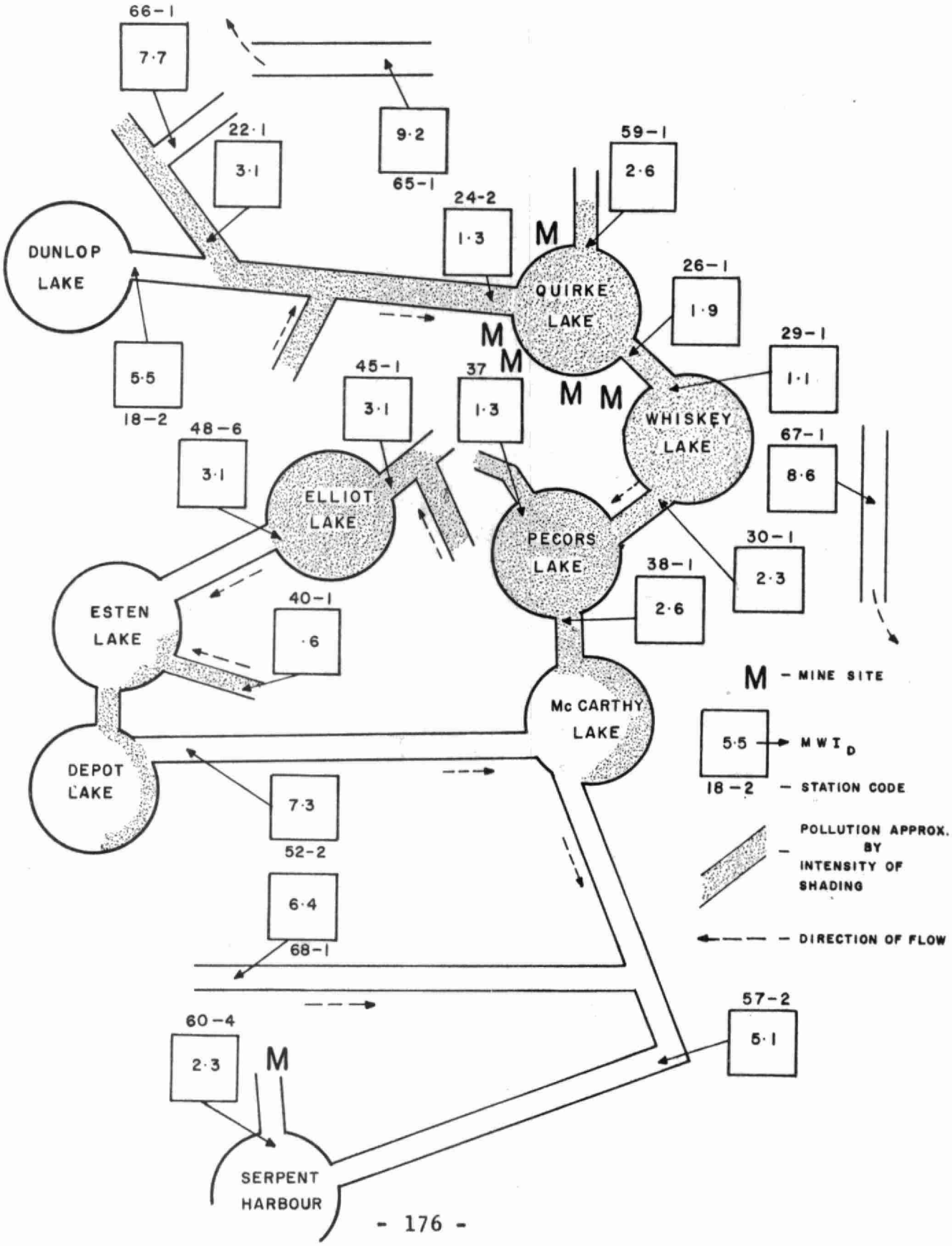

FIG.-8

SERPENT RIVER BASIN

RELATION BETWEEN WEIGHTED INDEX DIVERSITY AND VARIOUS CHEMICAL PARAMETERS

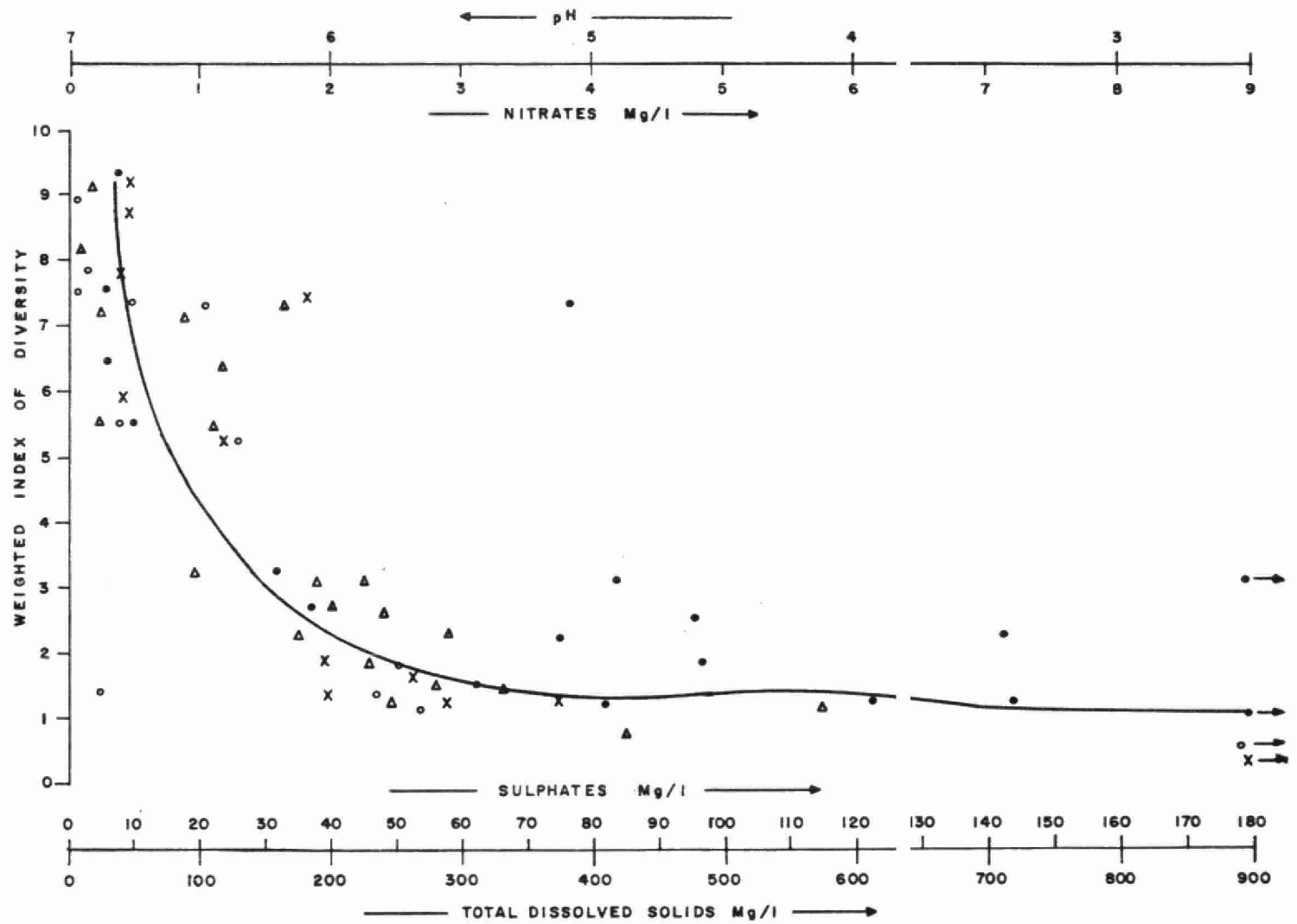

LEGEND

- • — SULPHATES PPM.
- ○ — NITRATES PPM.
- X — TOTAL SOLIDS PPM.
- Δ — pH

SESSION CHAIRMAN,
MR. CONRAD H. EIDT,
DIRECTOR OF ENGINEERING,
REGIONAL MUNICIPALITY OF NIAGARA,
ST. CATHARINES, ONTARIO

R. S. CUTHBERTSON

"A PRACTICAL APPROACH TO THE FILTRATION OF METAL HYDROXIDES"

BY

R. S. CUTHBERTSON, SENIOR ENGINEER

E. B. HETTWER, SENIOR CHEMIST

NORTHERN ELECTRIC COMPANY LIMITED,
LONDON, ONTARIO

Eight years ago we had the privilege of presenting to this convention a paper on the treatment of plating shop effluents at the London plant of the Northern Electric Company.

Perhaps I may be allowed to repeat some of the facts that were mentioned at that time and then proceed from there with the subject of this paper.

The Northern Electric Company produces telephone sets at the London Plant. Incorporated into the manufacturing cycle is an extensive plating operation. If you look at your standard telephone it seems to consist only of plastic and wire but if you look more closely at the inside you will find parts that are copper, nickel, chrome, zinc or tin plated, or anodized aluminum. Parts in the receiver and transmitter might even be gold or silver plated. Processes to plate all these metals are available in the plant. Parts that are being plated have to be rinsed several times during a plating cycle, after alkaline cleaning, acid pickling, plating, post plate treatments and so on. For rinsing only, the plating department uses approximately 50,000 gallons/day of city water, which then has to be discharged into the sewer. Nearly every solution used in the plating department is toxic, starting with the zinc, copper, gold and silver plating solutions that may contain more than a pound of cyanide/gallon, chrome plating solutions that contain chromic acid, to solutions that contain hot, strong mineral acids or alkalis. Obviously

the rinses after these solutions will be contaminated with these materials and also contain salts of most of the heavy metals.

So eight years ago we reported with some pride on a continuous, fully automatic system to treat those toxic effluents before discharge into the sewer.

The processes employed were standard treatment processes and their chemistry should not be discussed here. Rinses were separated in the Plating Department into those containing cyanides, chromates and acids and alkalis. Cyanides were oxidized with chlorine gas to nitrogen and carbonates; chromates were reduced with sulphur dioxide gas from the hexavalent to the trivalent state and then precipitated with caustic soda. The effluents from these processes were mixed with the acid and alkali rinses, the pH adjusted between 5.5 and 9 and the effluent then discharged to the sewer. Addition of chemicals to these flow-through processes was fully automatic, controlled by pH and oxidation-reduction potential probes. Sometimes the Plating Department has to discharge strong concentrates, such as spent pickling acids. In our case these solutions were dumped into special holding tanks and then slowly bled into the appropriate treatment tank.

When our plant was first conceived, all effluents, industrial and sanitary, were supposed to be discharged to a township sewage plant which was specially built to service this immediate area. However, as soon as the plant was on full production it was realized that the load imposed on the sewage plant was too high to handle it efficiently. The decision was made to separate the industrial and sanitary effluents and direct the former to the storm drains, while only the latter continued to flow to the sewage plant. The storm sewer discharged into Murray Drain which had only a minimal flow except during spring run-offs. Murray Drain connected to the Dingman Creek watershed which fell under O.W.R.C. jurisdiction.

It now became immediately apparent that although we had a modern waste treatment plant for cyanide, chromate treatment and neutralization we still were in serious trouble in meeting the O.W.R.C. requirements for discharge into a storm sewer.

As mentioned before, the effluent from the plating department contained a number of metallic salts. After neutralization at a pH 7-9 most of these metals were more or less quantitatively precipitated as metal hydroxides.

In the original plant design, in order to minimize the amount of water used for rinsing, all rinse tanks had been equipped with solu-bridge controls. By pre-selecting a permissible conductivity, which is equivalent to a permissible contamination, the controls would automatically shut off the flow of water as soon as the set-point had been reached. This did a lot for the annual water bill but it also meant that the concentration of contaminants in the effluent was high. While the effluent from a zinc plating operation with free flowing rinses might contain approximately 50 ppm of cyanide, the effluent at our plant

contained 3000 ppm. A similar relationship existed in chrome plating and for the concentration of metallic salts. The ultimate result of these high concentrations was a final effluent that contained 500-1000 ppm of metal hydroxides. This exceeded by up to 50 times the O.W.R.C. requirements of 20 ppm max. suspended solids. In practical terms, the amount we are dealing with is 1 ton per week of metal hydroxides, or 8-45 gallon drums per week in bulk containing 50% water and 50% solids.

It was obvious that steps had to be taken to remove the solids. Our Plant Engineering Department considered lagooning, vacuum or pressure filtration. Lagooning was soon discarded as no area suitable for this purpose was immediately available nor did the concept of lagooning appeal from the aesthetic viewpoint.

We did not have sufficient experience in vacuum filtration. At that time, in the technical literature no positive claim was made for vacuum filtration over pressure filtration, for such an application. Space limitations and lower initial cost made pressure filtration more attractive to us. It seemed desirable to install two filters which would be on stream alternately to cover the 24-hour period each day that the Plating Department was on production. Due to a misconception of the time required for cleanout, and financial considerations, the two-filter idea was discarded. Based on estimated data supplied by us to a filter manufacturer, a pressure filter with 350 sq. ft. of filter area was recommended and accepted. The filter contained 14 vertical leaves covered with Dacron bags. Included in the system was a 1200 gal. pre-coat tank with 150 gal./min., 50 psi head, precoat pump and a 300 gal. body feed tank with proportioning type feed pump for the addition of diatomaceous earth as filter aid. The filter was connected to the effluent pump on the neutralization tank. Level controls in that tank would put the filter automatically on recycling should a no-flow condition exist. It was intended that the filter should handle all the effluent to a maximum of 60 gal./minute. It was recommended that we precoat with 50 lbs. of material containing 93% diatomaceous earth, 7% asbestos fibres and that we add 2 parts of filter aid to 1 part of suspended solids to maximize the filter cycle.

With a beautiful,well engineered modern filter installation and with high hopes for a pat on the back by the O.W.R.C. we started our first cycle. To our utter disbelief we watched the needle on the pressure guage on the discharge side drop to 0 after 20 minutes. We blew the filter back, opened it and found that we had deposited approximately 1/16" of cake, most of it filter aid and some solids. This somewhat dashed our hopes for the pat on the back.

We repeated the cycle over the next several weeks before we realized that the gelatinous, slimy characteristics of the metal hydroxides were sealing the pores of the filter cake and the higher the pressure differential in the filter, the faster this sealing would occur. At this point we started to increase the ratio of filter aid diatomaceous earth to solids gradually until we had reached a ratio of 5:1. Even then we could not run the filter for one eight hour shift. It was apparent that the cost of operating the filter was excessive, amounting to about $200/

day for precoat and filter aid materials. Labour costs were proportionately high as the time necessary for clean-out was approximately six hours. The removal of the cake from the Dacron bags was extremely time-consuming, as great care had to be taken not to damage the bags.

We realized that this was a completely unrealistic economic situation and felt that we should consult with other manufacturers who employed similar plating processes and who had installed identical treatment facilities.

The reports we got were not too encouraging:

Manufacturer A

Employed two filters with 775 sq. ft. area each with a flow rate of 30-50 gal. min., which was equivalent to our flow. Their available filter area though was four times that of our filter. Filter runs were from four hours to five days based on a two shift day. All concentrates were hauled away.

Manufacturer B

Employed four filters, 500 sq. ft. each, flow rate 120 gpm. Filter cycles 30 minutes to 16 hours.

Manufacturer C

Employed four filters, 500 sq. ft. each, flow 450 gal./min., filter cycles 5 minutes to 2 hours.

These people had actually discarded pressure filtration as a means of hydroxide removal. Similar reports reached us from two other locations.

It was quite evident that although these manufacturers had a better flow/filter area ratio than ours, at .17 gpm/sq. ft., they all had to cope with the same problems essentially. They had arrived at different solutions, such as having the dumped concentrates hauled away or lowering the pH to 7 or below 7. Of course concentrate dumps are the major source of the hydroxides and if one can get rid of the caustic etches from anodizing and spent acids from pickle lines the amount of solids from the rinses only will be minimal. However, at the present time no one is permitted to haul away concentrates and dump them somewhere.

To lower the pH might, of course, help filtration, in lowering the concentration of suspended solids in the effluent, but it does not do much if you strive to remove the metallic salts from your solution because, as stated before, at the lower pH the precipitation will be incomplete.

So for one year our filter was off-stream while we were desperately trying to gain information on this process. We obtained the

services of a consulting chemical engineer, Dr. Abend, from Berlin, Germany. His assignment was to advise on means by which we could extend our cycle to three shifts. His recommendations were to change the filter septum from Dacron to stainless steel mesh, to use a different pre-coat material imported from France, and to discontinue the addition of filter aid. Although the filter cycle was extended markedly, we did not reach a full three shifts because the wide range (15-300 gpm) of the flow regulator installed in our system did not allow us to adjust the flow properly to his recommendations. After his departure an intensive program was started to study the relationship between flow and solids content on the filter cycle more closely.

It was shown conclusively that at minimal flow the filter cycle was extended to the time when the space between the leaves was completely closed by solids. At that flow the solids content really did not affect the cycle other then the endpoint being determined by the capacity of the filter to hold solids.

We now saw our way clear to achieve our objectives and in chronological order these are the steps we took:

1. The Dacron filter bags were replaced with stainless steel mesh, 24 x 110 Dutch Weave, tightly formed over the support frame.

2. Asbestos fibres only were used as pre-coat material. These fibres formed a tightly interwoven layer that could be peeled from the leaves upon cleanout. Although the price of fibres was higher than that of diatomaceous earth, the cost of labour for cleanout was reduced.

3. The flow regulator was replaced with one having a range of 4 - 50 gpm, and a rate of flow indicator was installed in the system. This combination permitted accurate control of low flow rates.

4. To reduce the flow, a stand-by tank was equipped as a settling tank. Here solids were removed by sedimentation and it permitted, during periods of high flow, about 60% of the cleared effluent to by-pass the filter. During low flow condition this ratio is reduced, which means that a higher percentage is filtered.

5. To achieve complete sedimentation in the settling tank we started adding a poly-electrolyte as a flocculant to the neutralization tank.

6. As utilization of existing equipment was foremost in our mind we retained the effluent pump as a filter feed pump. However, the impeller was changed to deliver only up to 60 psi pressure. By such an arrangement the maximum pressure on the filter can never be exceeded and the filter can remain completely unattended while it is on cycle.

Our procedure for removing metal hydroxides from plating shop effluents is, then, as follows:

Treated effluents from the cyanide and chromate destruction tanks and all the acid and alkali rinses and concentrate dumps are mixed in the final neutralization tank. Here the pH is maintained at 8.5 ± .5 to achieve maximum precipitation of all metals as hydroxides. Below this pH some of the metals such as nickel will not be precipitated; above 9 others such as aluminum and zinc will tend to dissolve again. To this solution a poly-electrolyte flocculant is added at a rate of 1 ppm. The effluent containing 500-1000 ppm of suspended solids flows into a settling tank where the solids are concentrated up to 4000 ppm on the bottom of the tank. Cleared effluent from the tank is pumped directly to the sanitary sewer. The concentrated solids from the bottom of the settling tank are pumped to the filter, with the filtrate being discharged to the sanitary sewer also.

The filter is precoated with 20 lbs. of asbestos fibres, which is slightly less than 1 oz./sq. ft. of filter area. We were adding to this precoat an additional layer of 20 lbs. of diatomaceous earth, but this was discontinued as it had no effect on the clarity of the filtrate or the cycle. The filter is now put on stream, the output flow rate being set at 20 gpm at a maximum input pressure of 60 psi. It will stay on stream for 3 days during the week and 4 days over the weekend. No mechanical adjustments or attendance is required.

The clean-out is scheduled on a regular basis to use the day-shift utility man. At the end of the cycle the filter heel is blown back into the neutralization tank and air is passed through the leaves for 1½ hours to dry the cake. After that time the cake will contain 50% moisture.

The filter is cleaned manually, most of the solids being removed by just shaking the leaves. The rest is peeled off with the precoat layer. The solids are collected in drums from the receiving hopper under the filter. These are hauled to a city sanitary landfill area. Since the solids consist of neutralized hydroxides they are completely acceptable in the landfill. The leaves are rinsed with water, the filter closed and ready for precoat again. The time required is three hours.

The system has been in operation for three years. During that time the City of London built a trunk sanitary sewer to service the industrial park in which our plant is located. Our system enables us to meet the requirements of the city's industrial waste by-law which limits the discharge of chrome to 2 ppm, cyanide to 1 ppm and suspended solids to 350 ppm. Our original aim in improving our filtration process was to meet the O.W.R.C. requirement of 20 ppm suspended solids when discharging to a drainage ditch. This we had accomplished before we connected our waste to the city sewer. We have continued to operate at the lower figure despite the relaxation of the limits.

Our investigations and our experience gained have led us to the following conclusions:

1. For direct filtration of plating effluent a flow to filter area ratio of .12 gpm per sq. ft. had been accepted. However, this ratio will be unrealistic in most cases and should be approximately .03 gpm/sq. ft. for the higher solids content found in many plating shops.

2. At this suggested rate, however, the initial cost of equipment is extremely high. We have found that the combination of settling and pressure filtration is a better answer. If the filter is only used for dewatering the sludge, low flow rates can be maintained with a much smaller filter.

3. The initial cost of purchasing a pressure filter with a stainless steel septum is easily recovered through less maintenance and faster clean-outs. Mild steel is not recommended, as corrosion products will clog up the pores.

4. Asbestos fibres, although high in cost, result in a better precoat and reduce off-stream time and labour during cleaning.

5. Poly-electrolytes increase the settling rate of metal hydroxides without adding to the sludge volume. Additions of 1 ppm or less are sufficient.

6. If proper flow rates can be maintained, the addition of filter aid is unnecessary.

The costs of removing suspended solids from our effluents at present are:

Precoat material and Flocculant	$36.00/week
Labour 6 hours	$41.00/week
Total	$77.00/week

During that time we process approximately 300,000 gal. of water. This, then, represents a cost of 23 cents/1000 gal. of effluent. Weight of dry sludge removal is 1 ton. Were the concentrations of solids lower, the costs would be proportionately lower, or vice versa.

Our outlook for the future in further improving our waste treatment facilities does not include any expansion in filter capacity as we feel that the present filter can handle our requirements adequately. However, we are going to enlarge our settling tank to increase the retention time while decreasing the flow rate, and to increase the capacity for holding sludge.

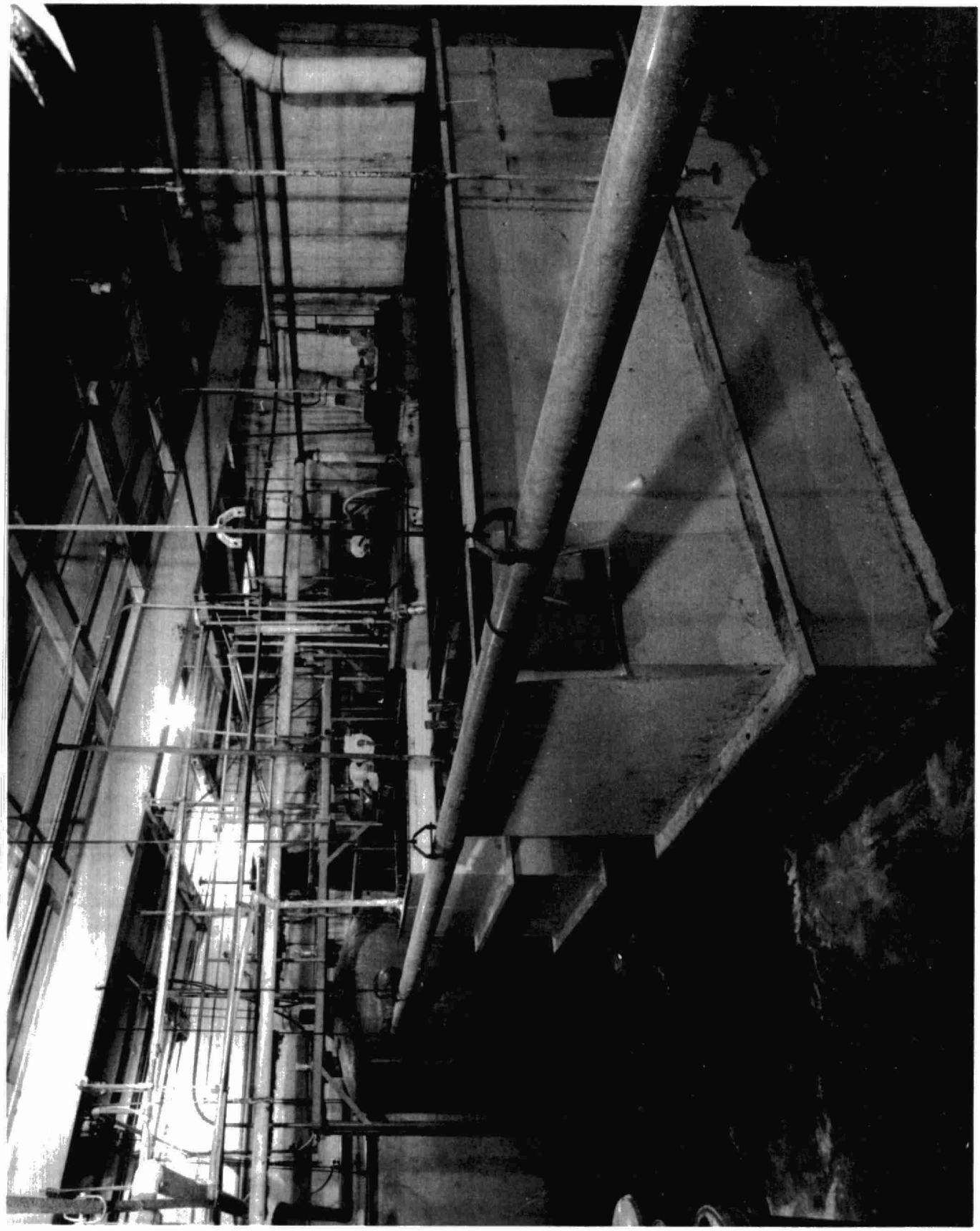

An overall view of the waste treatment plant with the treatment tanks in the background, three dump tanks barely visible and the former chrome treatment tank, now a spare tank, nearest the camera.

Partial view of waste treatment area showing chrome treatment tank in left foreground, sodium hypochlorite tank in centre and cyanide treatment tank in right background.

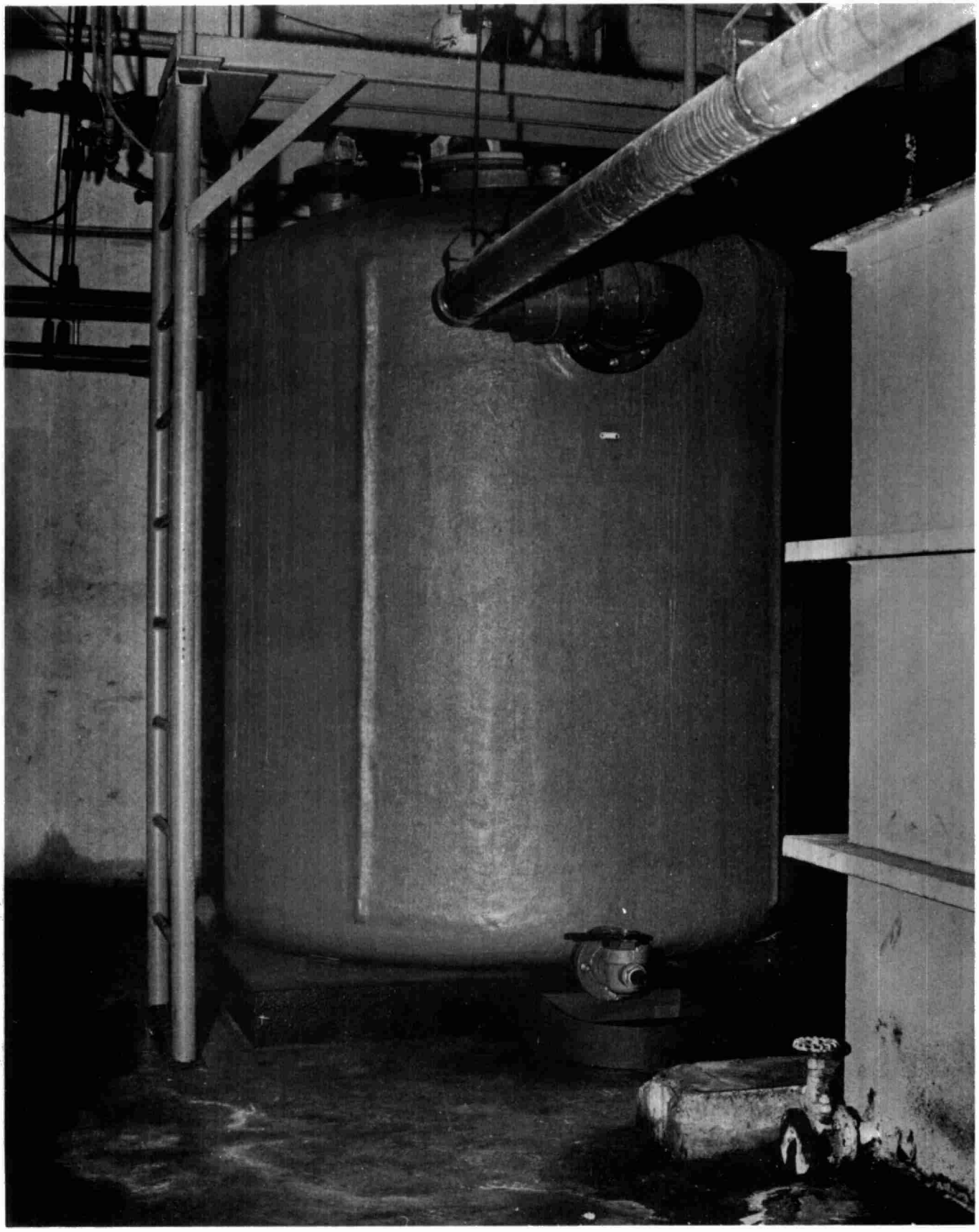

Close-up of chrome treatment tank with PVC discharge piping in foreground, pH and ORP probes on top of tank, and agitator motor in centre.

View of the neutralization or final pH tank in foreground and settling tank which is barely distinguishable in the background.

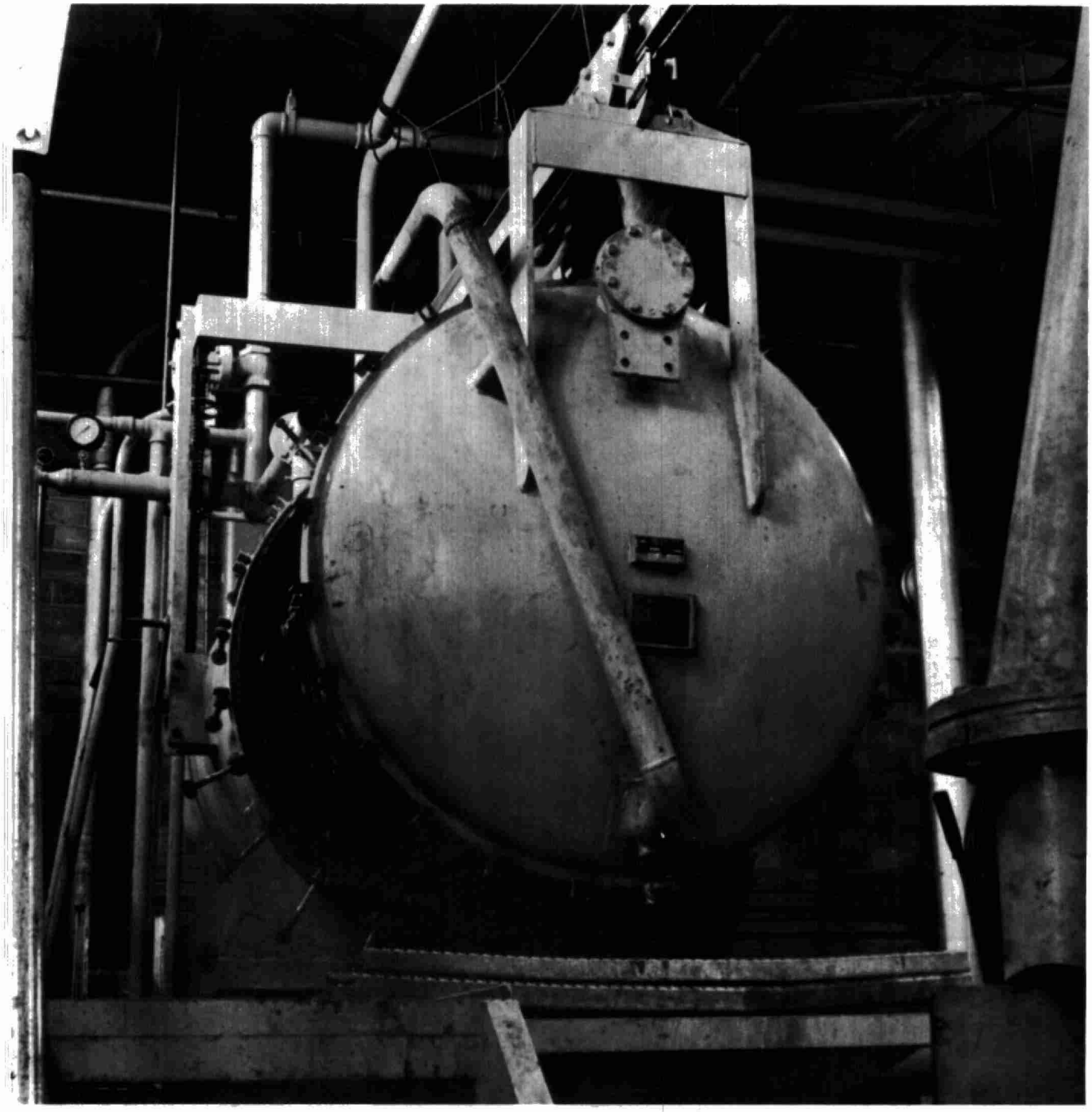

Pressure filter in open position.

Filter leaves showing bridging of solids between leaves.

Cake thickness.

"CHRYSLER CANADA LTD. INDUSTRIAL WASTE TREATMENT PLANT, WINDSOR, ONTARIO"

BY

D. O. OSMUN, MANAGER,
CONSTRUCTION AND FACILITY ENGINEERING,
CHRYSLER CANADA LTD.,
WINDSOR, ONTARIO.

INTRODUCTION:

The Manufacturing Complex served by the Waste Treatment Plant comprises an Engine Assembly and Machining Plant and a Car Assembly Plant.

These facilities are located in the City of Windsor, Ontario on 148 acres of land bounded by Grand Marais Road on the South, Tecumseh Road on the North with Chrysler Centre being the Easterly limit.

Construction of a 295,300 square feet Car Assembly building was completed in 1929. From this beginning the complex has expanded to 3,014,700 square feet in 1966, ten times the initial program. The 1966 plant area includes 717,600 square feet of the Engine Plant.

Waste products from these manufacturing operations consist mostly of cutting oils from the Engine Plant mixed with overflows from the bonderizing and soluble paint process in the Car Assembly Plant. This effluent mixed at times with storm water run off from the buildings and paved yard areas was drained into Grand Marais Drain, an open waterway, by a 27 inch storm and process sewer along Chrysler Centre, and a 60 inch storm and process sewer through the centre of the Complex.

Due to Canada - U.S. Automotive Trade Agreement between Canada and the United States, coupled with an increased demand for Chrysler products, Chrysler Canada Ltd. between 1960 and 1967 increased the Car Assembly facilities by 47 per cent. Both plants were rescheduled from a one shift to a two shift operation. Increased production generated increased waste products.

Prior to 1963 measures taken to minimize pollution included, elimination of specific contaminants (for example phenol) from purchased materials, and careful control of batch dumping of wastes.

It became apparent to Chrysler Engineering that with the increased volumes of waste, it was going to become increasingly more difficult to comply with the proposed restrictions to be imposed by Provincial and Municipal codes. A typical analysis of the effluent of these two sewers in 1963 is as follows:

Date	Sample	pH.	Susp. Solids P.P.M.	Total Oil P.P.M.
April 23, 1963	60" drain	8.0	82	48.5
	27" drain	8.0	19	21.4
April 23, 1963	60" drain	8.4	56	18.9
	27" drain	7.1	35	17.2

PRELIMINARY STUDIES:

During 1964-65 further investigation by Chrysler Engineering indicated the volumes, percentage of oils, and suspended solids in the waste effluent would be increased considerably in the near future.

The Consulting Engineering firm of M. M. Dillon Limited was retained in October 1965 to determine flow measurements at the outlets of each of the 27 and 60 inch sewers.

In January, 1966, the scope of the Consulting Engineer's work was extended to include a complete preliminary report. Using the following guide lines the report was to include:

1) Material sources, flow rates, composition and characteristics of wastes within both plants.

2) Total water usage.

3) Arrangement and capacity of existing plant drainage system.

4) Requirements of O.W.R.C. and City of Windsor regulations as applied to disposal of industrial waste.

5) Compilation and analysis of all previous effluent records pertaining to the 27 and 60 inch sewers.

6) Development of a preliminary treatment facility which would include:

   (a) Process flow diagram
   (b) Plant and property layout
   (c) Cost estimate.

The preliminary report was completed in June, 1966. A review of the findings confirmed the need for a facility to treat the waste material prior to disposal into the open water course.

A typical analysis of the effluent from the 60 inch sewer in 1966 was as follows:

Date	Sample	Susp. Solids P.P.M.	Total Oil P.P.M.
March 18, 1966	60" drain	378	940
March 19, 1966	60" drain	1130	820

It is sufficient at this point to say Chrysler Engineering was in full agreement with the contents of the report, and the estimated capital costs of approximately $3,000,000.00.

Having established that further treatment of the waste effluent was required, a request for appropriation of funds was made to Chrysler Management. Within four months the monies were approved and the Consulting Engineering firm was directed to proceed with drawings and specifications in November, 1966.

DEVELOPMENT OF DRAWINGS AND SPECIFICATIONS:

The plant layout, selection of building materials, and equipment made during this phase of the program will have a major effect on the economics and efficiency of the plant operation for the life of the treatment plant.

Being aware the plant would be required to operate on a budget and also produce an effluent complying with governmental codes, the following general criteria was established:

1) Select equipment to simplify and eliminate maintenance.
2) Locate equipment for good access and eliminate safety hazards.
3) Where possible, repeat use of identical equipment. This will reduce inventory of spare parts.
4) Automate only where process automation is a proven system and can be justified on a cost savings in manpower or plant performance.
5) Simplify the system wherever possible.
6) Insure the plant has flexibility, (each stage should be capable of re-circulation to any other stage in the process).
7) Do not underdesign, and provide for future expansion.
8) Design with consideration being given to the plant operation. Eliminate excessive walking and duplication of effort.
9) Choose materials of construction using cost, appearance, durability and future maintenance as a guide.
10) Select building materials and methods of construction with consideration being given as to whether or not winter work is anticipated.

The philosophy of the above criteria is self evident but it might be of interest to highlight a few points. Air mixing was selected for the batch tanks in preference to mechanical mixers, realizing a substantial

savings in capital costs and future maintenance. All openings are curbed and guarded with handrails. Located throughout the plant are seven emergency showers and eye washes, to insure built in safety for the operating personnel. Major items of equipment such as pumps, motors, etc., are all located under hatches and can be removed readily using outside crane facilities.

Painted concrete block was selected in preference to brick and block at a savings of $1.50 per square foot of wall area. Structural steel was used for the building frame above grade because of winter construction.

A total of 100 - 24 x 36 inch working drawings was developed by the Consulting Engineers for the General Contract phase of the project. Each process system was clearly outlined by schematics leaving no doubt as to the intent of the working drawings.

In the specifications all materials of construction were described in detail as to suppliers and equipment manufacturers who were named, having a minimum of three sources, to insure both quality and competitive bidding.

Chrysler Engineering is of the opinion that being specific in outlining the requirements at the bidding stage, has resulted in extras after award of contract, being held at less that 2 per cent of the general contract price.

Problems always develop in assigning responsibility where more than one area of specialization is involved. The rule used in this instance was to have the plant constructed and launched by those who have the most experience and qualifications to do a specific phase of the work. The nature of the plant facility and process made areas of responsibility easy to assess and these are as follows:

(a) General contract included all building and site facilities including mechanical equipment and piping necessary to transport chemicals and waste materials between the stages of process equipment. The responsibility of all site co-ordination during the construction phase fell in the area of this contract.

(b) Process contract included all equipment necessary to process the waste effluent using three stages of clarification. This phase of the project to be bid on a performance specification.

(c) Disposal of waste sludges required the supply and installation of equipment to dispose of these waste products by incineration. Having been given parameters this manufacturer was also required to meet a performance specification.

Contracts were awarded to Infilco Canada Ltd., in March, 1967 for the process equipment and installation. Bigelow-Liptak Canada Ltd., were given the contract for the complete installation of a flash incinerator in May, 1967. Award of the General Contract to Woodall Construction Co. was made in July, 1967.

CONSTRUCTION PHASE:

Within one week after award of the general contract the contractor was on the site. By September 1, 1968, thirteen months later the plant was 99 per cent completed and the system was operated as a unit using potable water.

As the construction of each section was completed, all the tanks

and equipment were tested using potable water, and all leakages and failures immediately corrected. Testing by using potable water has the advantage that defects can be rectified with relative ease; unfortunately, the results of this method of testing equipment and piping gives no guarantee that problems will not develop when more corrosive chemicals such as acids are introduced into the system.

The main problem during the construction stage was maintaining the construction schedule. Prior to award of all contracts, a critical path schedule was developed which was adhered to for the complete construction period. It was found necessary to have a full trades job meeting only once a week. This meeting was held on the job site and chaired by the Field Engineer who was on the site full time representing Chrysler and the Consulting Engineer. Problems arising at these job meetings became the interest of all involved parties till they were resolved.

PROCESS EQUIPMENT:

Due to the type of solutions being handled (acids and caustics) considerable care was exercised in choosing what was considered to be the best material or equipment available for the application. Steel schedule 80 pipe was used for liquid wastes with an expected pH from six to 10. For liquid wastes having a low pH of two to six, fibreglass reinforced plastic pipe was used throughout. Asbestos reinforced phenolic pipe was installed for all sulphuric acid and coagulant aid piping. The large underground process piping is steel for structural reasons and is coal tar epoxy lined for protection.

Fibreglass reinforced plastic was used for the construction of the sludge concentrator, and the alum and caustic storage tanks. All

remaining tanks both concrete and steel were lined with a 27 mil coating of coal tar epoxy.

Generally liquid wastes are transferred by centrifugal pumps and sludges by progressive cavity pumps. Diaphragm pumps were originally installed on the lime slurry system but were later modified and converted to plunger pumps.

All chemicals with the exception of the caustic soda are placed into storage tanks using the tank trucks' own equipment. With the caustic soda it became necessary because of the location of the storage tanks, to install a centrifugal pump for unloading.

Delivery of lime is in bulk and control of the lime dust is by a dust collector located on the roof. Sizing of this unit is very important and experience indicates the bag area should be six to eight times the surface area required for normal dust collecting operations.

High and low level alarms are located in all process wells and storage tanks. For safety reasons installed in the wet well is gas alarm equipment which automatically controls the fresh air supply and ventilation to this area. All motors have heat sensors connected to the alarm system in the main control panel.

The complete process is continually monitored on the main control panels in the control room. Levels of all tanks, rate of flow of the main process, operating pumps, final effluent pH, turbidity, incinerator temperatures, etc., are visually available on the control panels during the complete process.

PLANT PROCESS:

The process consists of three stages of successive treatment designed for the removal of oil, suspended solids and pH adjustment. The effluent includes such specialized industrial wastes materials as welding coolants, liquids from metal preparation such as acid wash, caustic dip, phosphate dip and paints. Other contaminates are gas, anti-freeze, heavy suspended solids, free oils, soluble oils, emulsified cleaners, and storm water.

Stage One of the treatment is carried out in four batch clarifier tanks, each of 550,000 gallon capacity. After each tank is filled with the liquid waste, sulphuric acid is added to break out the oil, and after mixing with air, the larger solids are allowed to settle to the bottom where they are pumped to a filter bed for further treatment. The filtered sludge is then disposed of by trucking to the Municipal landfill.

Liquid waste from these tanks is pumped to Stage Two for further treatment. The second stage of the treatment takes place in two 45,000 gallon flocculator tanks and two flash mixers. The liquid wastes flows through these tanks at a rate of 2,200 gallons per minute.

This stage of the treatment is accomplished by chemical reaction and air flotation. To produce the chemical reaction alum, caustic, lime, or coagulant aid is added to the waste being treated. These chemicals form an alum floc. This floc with the re-cycle of air-saturated liquid waste from the end of the flotation unit, by contact, removes suspended solids and free oil from the waste being treated. The floated floc is then removed by skimming, to be later concentrated and disposed of in the incinerator.

Stage Three is a solids-contact clarifier and consists of two 90,000 gallon tanks into which the overflow from the air flotation unit is fed. Chemicals available for treating the waste in this unit are alum and coagulant aid, which form a sludge. Lime or caustic soda is used for pH adjustment.

In addition to the normal plant waste, provisions have been made to treat storm run-off from driveways and yard storage areas. In the event of a heavy storm the storm water is diverted by pumping to a storm water holding pond of 2,400,000 gallons and processed later at convenience.

The plant capacity, based on a 16 hour per day operation, is 2,200,000 gallons. This capacity can be increased to over 3,000,000 gallons per day with no increase to the plant facilities by treating 24 hours each day. This treatment plant capacity allows for all foreseeable plant expansions, new plants, or in-plant process changes.

Sludges generated by the flotation and solids-contact clarifiers are concentrated to approximately one-third of their volume by removal of the "alum water" which is reused in the process as a coagulant. The concentrated sludges are then disposed of by incineration.

Treated water is circulated throughout the plant and used for bearing lubrication, floor wash down, and watering of the grass; surplus treated water overflows from the non-potable water reservoir into the Grand Marais drain.

With the exception of the heavy solids which settle out in the grit chamber and batch tanks, all waste materials created by the treatment process are being disposed of by incineration.

At the writing of this paper, the incineration phase of the process is still in the stages of final development. To date it has been necessary to redesign the nozzles because of clogging. At present the unit is operated 20 hours a week burning sludge at the rate of 1,500 gallons per hour.

OPERATING PERSONNEL:

The plant is manned 24 hours a day, seven days a week, having a total staff of 11 men; one Supervisor, two Chemists, seven Plant Operators, and one Janitor. The Plant Supervisor is responsible to the Engineering Department of the Engine Plant for the plant operation, which includes financial budgets, operating expenses, and plant performance.

All maintenance is completed on the third shift or week ends and is done by the plant operators. Throughout the plant the operators are responsible for cleaning and maintaining the appearance of the building and equipment. The janitor normally is responsible for the laboratory, office, washrooms, lunch room and stair areas.

Because of the complexity of the equipment, and equipment controls, emphasis was placed on technical training when selecting the operating personnel. The plant operators have extensive experience in the fields of pipe fitting, electrical controls, combustion gas controls, pumps and facility maintenance. In addition to the above training the plant operators have over 20 years sewage treatment plant operational experience upon which to draw.

The two laboratory technicians are graduates from St. Clair Technical College and it is their responsibility to assess all batches of

waste and advise the operators of the chemicals required for correct and economical treatment. These people also maintain all records of the chemical process and are responsible to the Supervisor for the complete laboratory operation.

A normal 24 hour operation has the Supervisor with two Plant Operators, and one Laboratory Technician on the day shift, two Plant Operators and one Laboratory Technician on the afternoon shift, and one Plant Operator and the janitor on the midnight shift. Only the Plant Operators work on the week ends.

Maintaining the grounds, such as clearing of snow, cutting the grass and cleaning of windows and major plant renovations is done by local contractors.

TESTING PROCEDURE FOR UNTREATED INDUSTRIAL WASTE:

The chemical laboratory tests and amounts of chemical required for treating the waste material are the responsiblity of the laboratory technician, who uses the following procedure:

After filling the batch tank with waste materials and air mixing, a sample is taken of approximately one gallon of liquid waste from the sample line in the batch house.

This sample is analyzed for -

(1) Suspended solids (filtering 20 micron paper).

(2) Ether solubles (oils).

(3) pH

(4) Settling test

(5) Alkalinity

(6) Temperature

(7) Other chemicals in solution if suspected.

Divide the gallon of liquid waste into six beakers and treat each beaker using acid to break out the oil in the primary clarifiers. Divide the contents of the beaker, which determined the treatment in the primary clarifiers into six parts. By adding coagulant aid, lime, caustic soda or alum to each part select the amount of chemicals required for treatment in the flotation clarifiers. Repeat this procedure and determine in the same manner the amount of alum, lime, caustic or coagulant aid required for the final stage of the process.

The chemical dosages arrived at by laboratory tests are adjusted to suit, as the batch is being processed through the plant.

TESTING FINAL EFFLUENT:

Sampling is done using an automatic sampler which produces a composite sample for each batch treated. Analysis of the composite sample is exactly the same as used for the untreated liquid waste.

In addition to the batch sampling a constant visual check is kept on the final effluent. The visual check is aided by a pH and turbidity meter located adjacent to the final sampling point.

Should it not be possible to obtain an acceptable standard of effluent from stage three of the process, then the effluent would be pumped direct to the storm water pond, mixed with other liquid wastes, and re-treated at convenience.

Complete records are kept of chemicals required to treat each batch of wastes and from these records the plant progress and efficiency is determined.

CHEMICAL ANALYSIS FOR RAW WASTES AND FINAL EFFLUENT FOR THE PERIOD - February 23, 1970 through March 4, 1970

		INFLUENT (WASTES)			EFFLUENT (TREATED WATER)			
DATE	BATCH NO.	ss. (ppm)	pH	Oil (ppm)	ss. (ppm)	pH.	Oil (ppm)	Turb. J.T.U.
2-24	123	287	8.5	152	10	9.8	5	8
2-24	124	312	9.9	119	13	9.4	9	10
2-24	125	588	9.3	210	4	9.5	2	5
2-24	126	218	9.2	68	12	9.6	15	5
2-25	127	200	8.5	100	6	9.0	2	5
2-25	128	826	9.6	369	8	9.3	2	5
2-25	129	300	8.8	235	6	9.5	9	10
2-25	130	381	9.6	201	4	9.6	15	10
2-26	131	425	9.3	195	12	10.5	8	12
2-26	132	390	9.8	244	11	9.8	12	10
2-26	133	411	9.2	201	12	9.8	4	10
2-26	134	281	9.1	77	14	10.2	15	10
2-27	135	157	9.0	279	13	10.0	6	10
2-27	136	465	10.6	194	3	10.5	4	5
2-27	137	552	9.4	206	8	10.5	3	10
3-2	138	411	9.3	182	8	9.8	7	10
3-2	139	251	8.6	107	7	10.2	4	5
3-2	140	139	8.9	77	8	10.1	7	7
3-2	141	464	9.7	531	13	9.4	10	12
3-3	142	473	9.7	274	9	9.4	3	5
3-3	143	294	6.3	131	3	10.2	4	5
3-3	144	384	7.3	405	5	10.0	8	7
3-3	145	502	9.7	296	12	9.9	15	12
3-4	146	382	9.6	350	3	9.8	7	5
3-4	147	288	9.3	140	36	10.1	10	7
3-4	148	266	9.0	304	10	10.0	9	7
3-4	149	122	3.5	213	8	9.9	15	7

Average influent wastes - suspended solids - 362 ppm
- ether solubles (oils) - 217 ppm

Average treated effluents - suspended solids - 9.2 ppm
- ether solubles (oils) - 7.6 ppm

Each of the above batches is 550,000 Imperial gallons for a total waste of 14,850,000 Imperial gallons during seven days of operation.

CHEMICAL COST FOR THE PERIOD - February 23, 1970 through March 4, 1970

Lime (hydrated lime)	24,250 lbs. @ 1.12¢	=	$271.60
Liquid Caustic Soda (50 per cent liquid)	1,535 gal. @ 62.7¢	=	962.45
Commercial Liquid Alum (83 per cent AL_2O_3)	nil	nil	
Coagulant Dow A-23	66 lbs. @ $3.00	=	198.00
Sulphuric Acid 63° Beaume (93.2 per cent H_2SO_4)	2,575 gal. @ 35¢	=	901.25
	Total		$2,333.30

Chemical cost per thousand gallons of waste water treated - $\frac{\$2,333.30 \times 1000}{14,850,000}$ = 15.7¢ per M gal.

Solids filtered from Stage One of the process were 24 cubic yards which was disposed of at a cost of $50.00 = 0.3¢ per M gal.

Float and settled sludges after treatment by sulphuric acid and removal of "alum water" was disposed of by incineration.

Concentrated sludge incinerated was 50,000 gallons.

Natural gas burned was 1,250,000 cubic feet

Cost of gas per 1,000 cubic feet 80¢

Cost of sludge incinerated per gallon = $\frac{1,250,000 \times 80¢}{50,000 \times 1,000}$ = 2¢ per gal.

The equivalent of 2¢ per gallon for sludge burned in terms of thousand gallons of waste water treated is $\frac{50,000 \times 2¢ \times 1000}{14,850,000}$ = 6.6¢ M gal.

Cost of chemicals and disposing of the by-products for this period of plant operation was - = 22.6¢ per M. gal. treated

To properly evaluate the absolute costs of treatment per thousand gallons of waste treated required all the costs of the plant operation and the initial costs of the facility.

The cost of labour and the method of amortization of the facility costs are significant only for this installation and could be misleading if used elsewhere. Because of this, the information has been deliberately omitted.

It should be noted that during this period of operation alum water was used exclusively as a coagulant. Records indicate that it is necessary to add fresh liquid alum to the system at the rate of 127 gallons per month. Of the total 2,575 gallons of sulphuric acid used, 855 gallons were used in the main process. The balance of the acid was required to concentrate the "float" to an oily sludge by dissolving the floc.

The cost figures shown are only factual for the seven days of plant operation stipulated. These costs could vary depending on the composition of the waste water being treated. During the past 12 months the costs of chemicals per thousand gallons of waste treated has been reduced from 30¢ to 15.7¢ and at the same time the plant performance has achieved 100 per cent compliance with local Municipal and O.W.R.C. regulations.

The optimum costs have not yet been achieved and it can be expected with increased experience with the equipment and the waste influents, further economies will be realized.

Final cost of the entire facilities including Engineering fees, incinerator, process equipment, diverting and collecting existing 27 and 60 inch sewers, access bridge to property over Grand Marais Drain and all site improvements was $3,140,000.00.

FUTURE DEVELOPMENT:

Chrysler Canada Ltd., has more than 200 acres of undeveloped property adjacent to the Waste Treatment Plant. The locationof the plant will insure, at minimum costs, complete treatment of any industrial wastes created should this property be developed by the Company.

The Municipality has served notice their liquid waste disposal area will be closed effective December 31, 1970. Closing of the disposal area dictated that other means for disposal of the soluble paint wastes were required. Fortunately recent new paint products allowed a change in the manufacturing process and the waste by-products of the revised process can be treated at the Waste Treatment Plant with no difficulty. The revised process has resulted in a dollar saving to the Company and it is expected other savings will become evident when the full potential of the Waste Treatement Plant is realized.

With the increase in costs and demand for potable water, it is visualized that the day will come when it will be economically feasible to re-use the treated water in the manufacturing process. Future facility planning has considered the use of the non-potable water and the results are very promising.

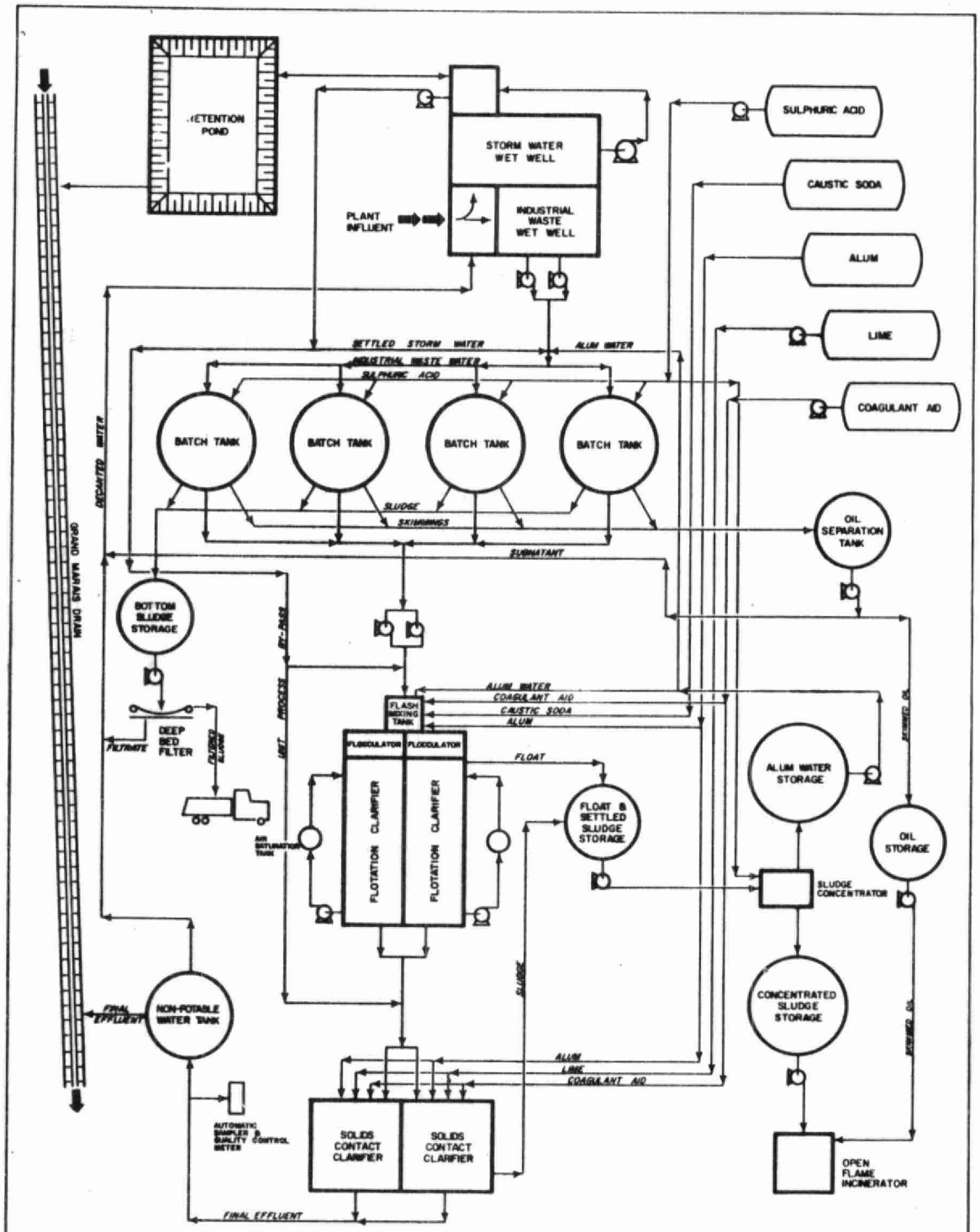

PROCESS FLOW DIAGRAM

REFERENCES:

1. Balden, A.R. Industrial Water Management at Chrysler Corporation - 1969

   Journal W.P.C.F., Vol. 41 #11, November, 1969

2. Balden, A.R. Waste Water Treatment at the Chrysler Corporation Toledo Machining Plant.

   24th. Purdue Industrial Waste Conference, May 1969.

3. Balden, A.R. The Treatment of Waste Water for re-use at the Chrysler Outboard Corporation, Hartford, Wisconsin.

   Central States Water Pollution Control Assoc., Kenosha, Wisconsin.

4. Poole, D.A. The design of Waste Treatment Facilities for the Automotive Industry - 14th. Ontario Industrial Waste Conference, June, 1967.

"OPERATIONAL GROWING PAINS OF AN INDUSTRIAL WASTE TREATMENT PLANT"

BY

H. G. COX, MANAGER,
PLANT ENGINEERING,
RCA LIMITED,
MIDLAND, ONTARIO

For the past three and a half years I have been closely associated with the operation of our waste treatment plant - from its initial application for O.W.R.C. approval stage, through the construction, to the operating stage in which we now find ourselves. From the title of my subject - Operational Growing Pains - I am indicating It has not all been sweetness and light over this period. I would like to relate some of the bumpy spots on the road, but first, a little descriptive background of the operation.

The RCA Ltd., plant at Midland, Ontario, is engaged solely in the production of colour television picture tubes. The plant has a floor space slightly in excess of a quarter of a million square feet and was constructed in the period from the late spring of 1966 until the late fall of 1967. Very limited production, primarily the final finishing operations, started in November of 1966, with the main portion starting up during the early months of 1967.

The plant, a single storey structure, except for the two storied office portion, is located on the eastern edge of the Town of Midland, on Georgian Bay. We are across the road from a strip of land along the Wye River, which has been made into a park with marina facilities by the Provincial Department of Lands and Forests. On the eastern side of the river is the Martyrs' Shrine and the reconstruction of Fort Ste Marie,

making the area a considerable tourist attraction - something RCA did not want to disturb, hence making the matter of air and water pollution control of even greater importance than would normally have been the case.

During the early planning stages it was realized that the facilities available in the Town of Midland, for both the supply of water and the treatment of effluent, were not adequate for the plant's requirements. The decision was made by RCA to install and operate both a complete water pumping system and an effluent treatment plant. The water pumping system provides chlorination and filtration and supplies all our water requirements - in fact, we supply the Town of Midland water system with approximately four million gallons a month.

The effluent treatment plant handles all industrial effluent from the tube plant, the discharge to the Town of Midland system being limited to the sanitary waste from the washrooms, plus one specialized process which will be discussed later.

The production of colour picture tubes produces an effluent with a content of a vast array of chemicals. Actual volumes of either water or chemical is not excessive, but, because of the multitude of sources and types of discharges, it was decided to install four separate drain systems throughout the plant. These are:

a) Sanitary sewer system - connected to the Town of Midland and serving the washrooms, plus a single process.

b) Clear water drains - connected at the storm sewer system, handles roof drains and any untreated cooling water effluents. Since we pump our own water and its cost is relatively independent of volume (within the capacity of the plant), we do not recirculate very much water - hence in a number of locations water is passed through the equipment, e.g., a welder, once for cooling and then directly to the drain system.

c) Caustic drains of steel pipe, connected to a number of items of equipment and to some floor drains. This drain system feeds to the waste treatment plant.

d) Acid drains of saran-lined steel pipe and connections to other items of equipment plus some floor drains. This is also fed to the waste treatment plant.

Figure I, gives a tabulation of the nature and magnitude of the effluents connected to each treated drainage system. Most of the continuous process effluents are relatively weak in chemical content as the process itself usually calls for a considerable amount of dilution or wash water. The concentrated dumps, unfortunately, cannot usually be scheduled in advance, at least with any degree of accuracy. Our other major contributor, the demineralizer, we have found to be consistently above expectation in frequency of regeneration and hence in magnitude of load on the treatment plant. Excluding the dump periods, the pH on the caustic side would run nearly neutral for a considerable portion of the time, and the acid line about 4.

The two drainage systems concerned run underground from the main plant to the waste treatment building, which is located about 475 feet to the north of the main plant. This treatment plant is a 40' x 40' building. A schematic of the operation is shown in Figure 2.

The effluents feed by gravity down the separate eight inch lines until they enter just below the main floor level, where each system is reduced to three inch lines. The three inch lines then are split into strong and weak effluent lines, flow to each being controlled by the pH sensor on the incoming line. In this manner, the pH at which flow is diverted to the strong holding tanks can be controlled and the 'dump' processes spread out over the operating period of the plant. To handle the relatively high hydraulic head developed across this series of valves, (isolating, control, and bypass) we have added an automatic bypass which takes over in cases of heavy flow and diverts the excess directly to the weak holding tanks. This has proven successful since during these very high flow periods we usually have pHs on each line relatively close to neutral.

From the strong tanks the liquids are pumped on a constant basis to either the chrome reduction tank, in the case of the acid system, or to the neutralizing basin, in the case of the alkalines. These pumps work continuously and we attempt to regulate their volume to spread the strong solutions out over the 24 hour period. This is done by both adjusting the pH at which diversion to the strong tanks takes place, and by throttling down the pump discharges.

The weak solutions flow, still by gravity, into one of the two 5,000 gallon concrete holding basins. Here the discharge is by pumps, feeding either to the lagoons or to the chrome/neutralizing basin system, as in the case of the strong solution tanks. The flow in this case is controlled jointly by level in the weak basins and by a weir level control on the output of the neutralizing basin. When the weir level indicates maximum flow, the controller adjusts valves on the weak solution pump discharge to throttle back the normal discharge route and recirculate back to the weak basins.

Only the acid side of the system goes through the chrome reduction tank, since hexavelent chrome sources are all on the acid lines. In actual practice, the level of chrome has been so low that we have not, aside from a checkout, run the sulphonator which is available to reduce the chrome.

Neutralizing takes place in a 10,000 U.S. gallons concrete tank with a split dividing wall up the centre. In this way we initially neutralize to a slightly low pH in the first half, and control up to desired pH by the addition of lime only in the second half. Separate pH sensors in each half automatically control the chemical addition valves and record the pH.

The combined effluent then flows over the weir into the filter sump, from which it is pumped through one or more of three pressure diatomaceous earth filters and hence to the storm sewer.

The level in the filter sump is measured by a bubbler pipe device, and the output of the filters is diverted back to the filter sump should the level drop too low. In this manner, flow through the filters is maintained (the filter cake maintained) for all plant effluent conditions.

In addition, facilities are provided for precoating the filters and for maintaining a lime slurry for neutralizing. The acidic portion is provided by the use of sulphuric acid. All tanks and basins are lined concrete.

This system was designed by our equipment supplier and our contractor/architect, and initial details were sent to the O.W.R.C. in October, 1966. A period of discussions, negotiations, etc., followed until February, 1967, when approval for construction was given. It was during these discussions that Plant Engineering at Midland first became involved. One of the problems at this stage was the definition of effluent content in sufficient detail for O.W.R.C. purposes. This was complicated by the fact that while similar processes were in operation in two RCA plants in the United States the overall combination of processes was not the same, nor was the operating time cycles of the various intermittent processes precisely determined.

During construction, several problems occurred, including an error in elevation, with the result that there is not adequate head room in portions of the treatment plant. The soil conditions were poor and piles were necessary to support the structure. The physical configuration of the plant has resulted in more than a desirable amount of pumping being necessary through the treatment process. As a result of this, and conforming with O.W.R.C. policy, we have installed spare pumps, permanently connected at all points, whereby instant changeover is available.

We also constructed a pair of cascading lagoons to provide temporary storage of the main plant effluent should a failure occur in the treatment plant. The schematic arrangement for the lagoons is shown in Figure 3. We have not, as yet, had a major failure requiring their use, but there have been several situations requiring short term diversions.

The most common situation is that which occurs after a short term power break, which causes the filters to drop the cake. The filter must then be cleaned and precoated. During this period we have frequently diverted the effluent to the lagoon, feeding it back for treatment at a later period. Provision is also made for manual neutralizing, testing by town officials, and then releasing the contents to the town sewers via a valve, normally locked closed. This would be used in the case of prolonged problems and by agreement with the town. To date, we have not had to use this arrangement.

Our initial start-up and operating problems were many and varied. I think the most disconcerting problem concerned the discovery that the flow capability of the gravity system was inadequate. This manifested itself in our screening room. The screening machine has a number of discharge points which empty into a pair of carbon-brick lined trenches in the concrete floor, which in turn connect to the acid drain system.

About the first time we regenerated a demineralizer bed during an operating shift, we found the level in the trenches, normally virtually nil, suddenly rising up to floor level. In fact, it was necessary to shut down the machine to avoid a flood. This was traced to the hydraulic head developed across the valving system at the waste treatment plant. The valve controlled by the pH sensor was an air operated device, and to allow servicing, a pair of blocked valves (also 3" diaphragms) had been installed - one on each side. Weir type, rather than straight through diaphragm valves, served to aggravate the problem. The loss, with relatively low static head of flow, was sufficient to reduce the flow and cause the backup in the trenches. To avoid replacing the entire valve trains with larger items, we installed a simple but rather effective bypass, as shown in Figure 4. At the 8" to 3" reducer, a 3" connection was made and the line run to an elevation about 18" above the normal line. This higher line ran directly to the weak solution basins. Hence, whenever the backup reaches the 18" level (well before trouble is caused in the main plant) the excess is diverted. The decision to economize with 3" valves, fittings, etc., resulted in some loss of control of effluent diversion, but in general the compromise has proven satisfactory.

We also had the weak acid holding tank overflow on several occasions in the early days. This tank is an underground unit with a sewer-type manhole, located immediately adjacent to the treatment plant. In fact, one such occasion occurred just as I was showing some Department of Labour officials through the waste treatment plant - a rather disturbing coincidence. These overflows occurred due to lack of pumping capacity in the weak acid pumps. Fortunately, from a Plant Engineering standpoint, the main plant was only running a single shift at the time and we were able to schedule demineralizer regeneration, etc., and carry on until a solution could be implemented. The discharge of these pumps was via 2" saran-lined pipe and the resultant dynamic head developed was considerably greater than the static head existing.

The static head was approximately 12 feet. The dynamic head at 100 G.P.M. was approximately 58 feet, for a total head of 70 feet. By replacing all the 2" pipe, valves, and fittings on the discharge line with 3" items, we were able to reduce the total head at 100 G.P.M. to less than 30 feet and increase our theoretical delivery from about 95 G.P.M. to over 150 G.P.M. I use the term theoretical delivery because we have never been satisfied with the actual delivery on these pumps - which are rubber lined devices. We are still hopeful of improving this when time permits. These figures I have just quoted apply to the discharge from the weak acid basin to the interior plant - the discharge to the lagoons could not be improved to the same degree without digging up pavement, etc., to replace the underground piping, which is also 2". Instead, we contented ourselves with replacing only the accessible items and achieving a more limited improvement - about 25%. This has proven adequate for all operating combinations, even now that the main plant is running on three shifts. We have not had a repeat of the earlier instance which saw the overflow run into the pump area and submerge six pumps under three feet of fluid - non-submersible pumps, too!

It has been under situations such as the above that our lagoons have seen their main service. On several occasions during this period, we rented, in a great hurry, a submersible pump to keep the flow under control - by dumping into the lagoons until the shift was over. We now have a portable pump set-up with hoses and an electrical outlet, but fortunately we have not had to resort to its use in recent times.

Mention was made of a process discharging to the sanitary sewer of the Town of Midland system. This is a rinse station, with an effluent consisting of water and graphite. The graphite is in the form of a fine suspension of relatively low concentration. Initially this flow went to waste treatment. Then it was found that this was one of the main reasons for reduced filter runs. The graphite was plugging the filters very rapidly, even though total content was low.

Discussions were held with town officials and it was agreed to divert this flow to the town system, which does not use a diatomaceous earth filter, and where its volume (about 600 U.S.G. per eight hour shift) would pose no problems. The solids content is well within the level specified by the town by-laws. Had this solution not been available, it would likely have been necessary to install a small, low-flow-rate diatomaceous earth filter at the source of the effluent to enable our main filters to operate efficiently.

Offsetting some of the problems, we had several situations turn out better than anticipated. An example is the chrome reduction requirement. It was found on plant start-up that the hexavalent chrome level was virtually unmeasurable, and, as a result, we do not operate the sulphonator except to ensure it is still operational. We have continued to check the chromate level in our daily sample analysis but we have not found any increase.

Probably the most expensive, distinctive, and difficult aspect of this waste treatment plant is the diatomaceous earth pressure filters. Initially three filters, each rated at 100 U.S.G.P.M., were installed, with space and mounting provision for a fourth identical filter. This fourth filter is now being installed to provide additional assurance during three-shift operation. These filters, in our experience, produce a good effluent quality (suspended solids). The only time we have found the suspended solids count to increase has been when we had a tear in one of the bags, or more recently, during the changeover to stainless steel screens, when the spacing of rivets around the perimeter was found to be too great. Even in these cases, while the solids go above the 15 ppm we strive to maintain, it seldom exceeds 50 ppm. This level is further reduced by the dilution from the cooling water effluent before it discharges to the Wye River.

However, we have found the filters extremely unpredictable with regard to length of runs, filter cake, ease of cleaning, etc. In fact most of our cost reduction activity in the treatment area has revolved around improved filter run cycles. We have approached this problem from several angles. We have had consultants look at the situation and provide recommendations, and have had chemical suppliers and the filter manufacturer offer suggestions. We have had the assistance of a well qualified corporate

staff at our U.S. system, and the facilities and skills of our own local chemical and physics laboratory people. We have found that there is no substitute for day-to-day familiarity with the situation when it comes to solving this sort of problem. The combination of our plant engineering operation personnel, plus the C & P laboratory personnel, has proved the most effective. Improvements have to be tailored to the exact operating situation, to ensure that they do not create alternate problems greater than the one solved.

An example of this was our initial implementation of body feed. The initial design did not include facilities for this, and, after having the suggestion of its usefulness come from several sources, we installed a system to dump measured body feed into the filter sump. This had a distinctly advantageous effect upon the filter operation but a distinctly bad effect on the filter pumps. Within a very short period we went through two sets of impellers and have found that the pump housing has been worn to a dangerous extent. Since these are 200 G.P.M. pumps, it was decided it would be more economical to add a body feed pump and inject the feed into the system between the filter pumps and the filter. This has now been installed and was successfully put into operation before the filter pump housings became a perforated sieve.

Another area of concern on which we have spent considerable time and effort is the achievement of a uniform precoat on the filter leaves. Various types of precoating materials, (asbestos fibres, grades of earth, etc.) have been tried in differing concentrations, with rather nebulous results. This series of experiments was performed as a result of a decision to change the filtering screen material. Initially these were dacron bags over a stainless steel support screen and frame. We found the bags were inclined to blind, and had to be washed. On one occasion, the local laundry, despite instructions to the contrary, used hot water, and that batch of bags shrunk to such an extent that they would no longer fit over the frame. We then installed our own washing machine at the waste treatment plant so that we could control the washing, and reduce the time involved. However, due to constant problems with the cleaning - man-hours consumed, etc., and the general deterioration of the bags themselves (despite frequent patching), which would have necessitated their replacement some time this year anyway, we started to look into the use of stainless steel mesh. We first had four of the old frames covered with mesh, two each of 60 x 60 and 110 x 24, and put them in service to evaluate the difference, if any. In our operation we could not discern any advantage of one over the other and we have since proceeded on the basis of cost. In the case of covering the existing screens, this could be done by a Canadian firm cheaper with the 60 x 60 mesh and the fourth filter could be purchased from the supplier cheaper with the 114 x 24 mesh. Hence, we will have both in operation. Coincidental with the initial trials of the four screens, we found that an improved precoat and completely acceptable run length could be obtained with less than the full number of screens in service. We have, therefore, reduced to about one-half the screens in use, plugging the other outlets. Essentially this was an inexpensive way of obtaining greater precoat and filter flow velocity without increasing pump capacity. It is possible that this ties in with the pump housing erosion mentioned earlier and that there will be no problem with new housings which at this time are being installed.

From the operational layout shown a while ago, it could be seen that our lagoons were not intended for normal operation. Late in 1969, however, we tried running the effluent through the lagoons on a continuous basis, and then back to the neutralizing basin. This is possible only because it is unnecessary to treat for chromate. It has resulted in greatly reduced chemical consumption at the treatment plant. In a typical four month period before the change, we consumed 1,060 pounds of sulphuric acid. In a similar period of lagoon use, our acid consumption has dropped to less than 200 pounds. We are now looking into the need and advisability of lining these lagoons.

A portion of this reduction in chemical consumption may also be associated with better control of pH. We spent a period of time determining the optimum probe cleaning cycle and even now have to adjust to suit conditions. One minor addition was found to improve probe control reliability. This was the addition of a small amount of H.P. Air, bled into the probe junction boxes, to keep them dry despite the humid atmosphere in the plant.

From the above you may have gathered that, in my opinion, few of the operational waste treatment problems have pat, neat, text-book solutions. We have tried most of the avenues of problem solving - they all have proven useful in different situations. Even though our plant is said to be an automatic system, the attention of a competent operating staff for a considerable portion of each operating shift is essential. In our case, the plant is under the responsibility of the Chief Stationary Engineer in the Powerhouse and is operated by Powerhouse personnel. Our Chief holds a First Class Ticket. Each shift is manned on a 24 hour, 7 day basis by a Second and Third. We have a man with a Second Class Ticket, and one with a Third Class Ticket, on full-time maintenance of Powerhouse, Pumphouse, and treatment plant. These employees are supported by a graduate engineer on the Plant Engineering staff, plus the C & P Lab. personnel mentioned earlier, which includes metallurgist, chemist and chemical engineer, plus technicians. All of the operating and maintenance personnel of the Powerhouse devote considerable time to the treatment plant. During the day shift, the Third is virtually full-time at the treatment plant. On other shifts and on weekends, the plant is checked, meters read, pH etc., every two hours. In addition to the automatic alarms (if parameters go off normal), we take samples at various points once a day and the C & P Lab. perform a complete analysis of these.

All of this obviously costs money - quite a bit of money when the rather limited total through-put gallons are considered. Initial cost of the waste treatment plant was approximately $500,000.00.

This, incidentally, did not include the cost of the drainage systems through the main plant. Since then we have spent a further $60,000.00 on various changes, capacity increases, etc., bringing the total investment to $560,000.00. Operating costs, using an allocation of manpower based on time spent in the various areas, runs about $38,000.00 per year. For this, in 1969 we treated approximately 50 million U.S. gallons of effluent. If depreciation and overhead costs are included, this works out to about $1.40 per thousand gallons. Even taking only direct operating costs - labour and material - and excluding depreciation and overhead, the cost runs to .75¢ per thousand gallons.

We expect to reduce this somewhat during 1970, due to improved operational methods and also increased main plant load, with consequent increased through-put. It will still run at something over $1.00 per thousand gallons total cost.

Our Chief Stationary Engineer is fond of saying that we have a contract to pump water from Georgian Bay, clean it up to O.W.R.C. standards, and return it - and that we are half finished. Unfortunately O.W.R.C. have not yet authorized any progress payments on the contract.

FIG. 1 EFFLUENT SOURCES

ACID WASTE LINE

SCREENING OPERATION	PHOSPHORS HYDROFLUORIC ACID	60-70 G.P.M.
FUME SCRUBBERS	HYDROFLUORIC ACID HYDROCHLORIC ACID	10 G.P.M.
ACID NECK WASHER	HYDROFLUORIC ACID	3 G.P.M.
SALVAGE ACID SINK	HYDROFLUORIC ACID	3 G.P.M.
MASK SALVAGE	HYDROCHLORIC ACID	100 G. DUMP WEEKLY
DEMINERALIZER	SULPHURIC ACID	65,000 WKLY 15,000 AVG DAY

CAUSTIC WASTE LINE

FUNNEL WASHER	DETERGENT RINSE WATER DETERGENT WASH WATER	50 G.P.M. 200 G. DUMP WEEKLY
ULTRASONIC WASH	RINSE WATER WASH WATER	18 G.P.M. 100 G. DUMP WEEKLY
ALUMINIZER CAUSTIC SINK	CAUSTIC SODA	50 G. DUMP WEEKLY
DEMINERALIZER	CAUSTIC SODA	30,000 WKLY 6,000 AVG DAY

APPROX. 1969 THROUGHPUT -

ACID LINE - 30,000,000 U.S.G.
CAUSTIC LINE - 20,000,000 U.S.G.
TOTAL - 50,000,000 U.S.G.

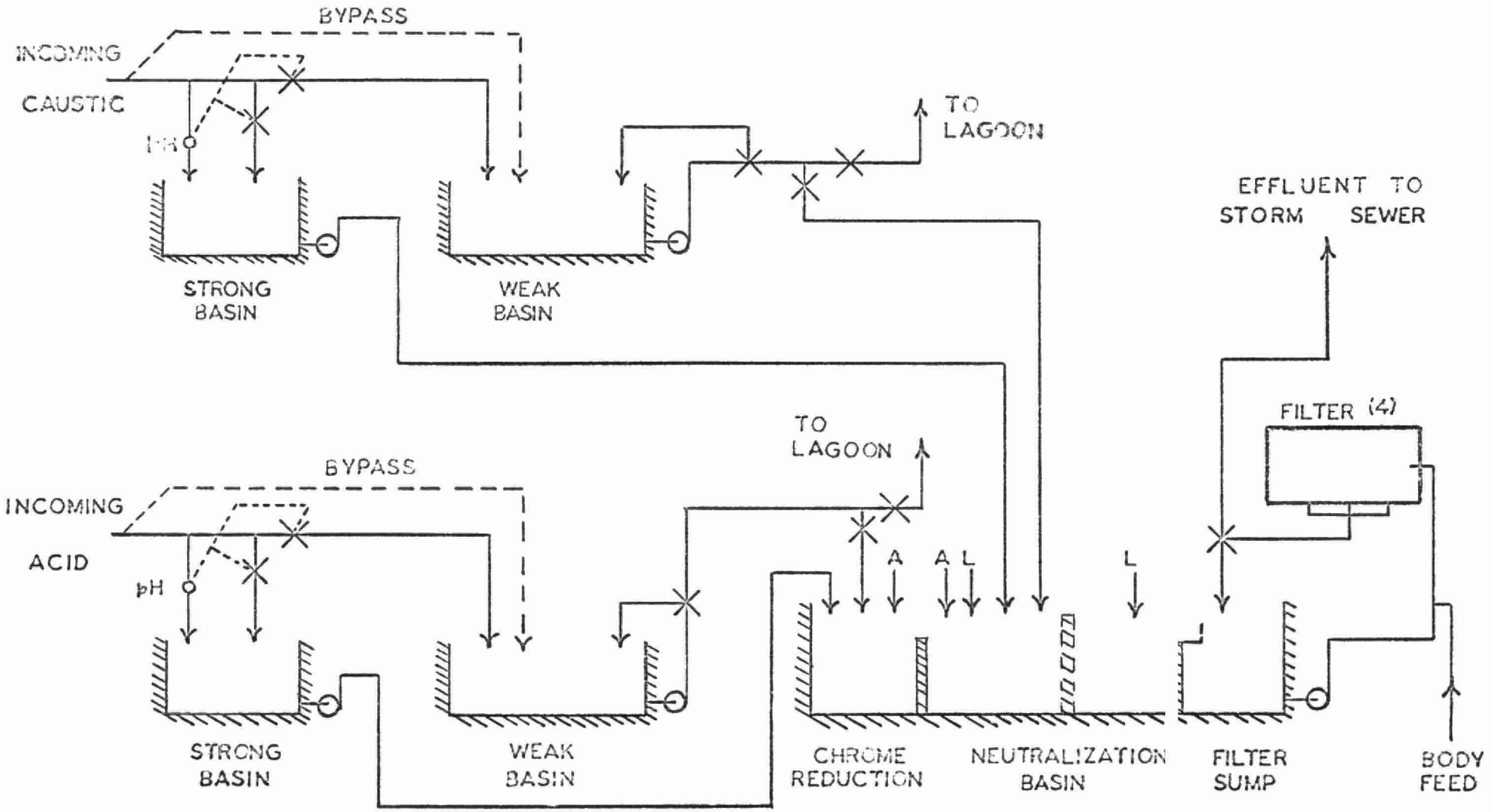

FIG. 2 TREATMENT SCHEMATIC

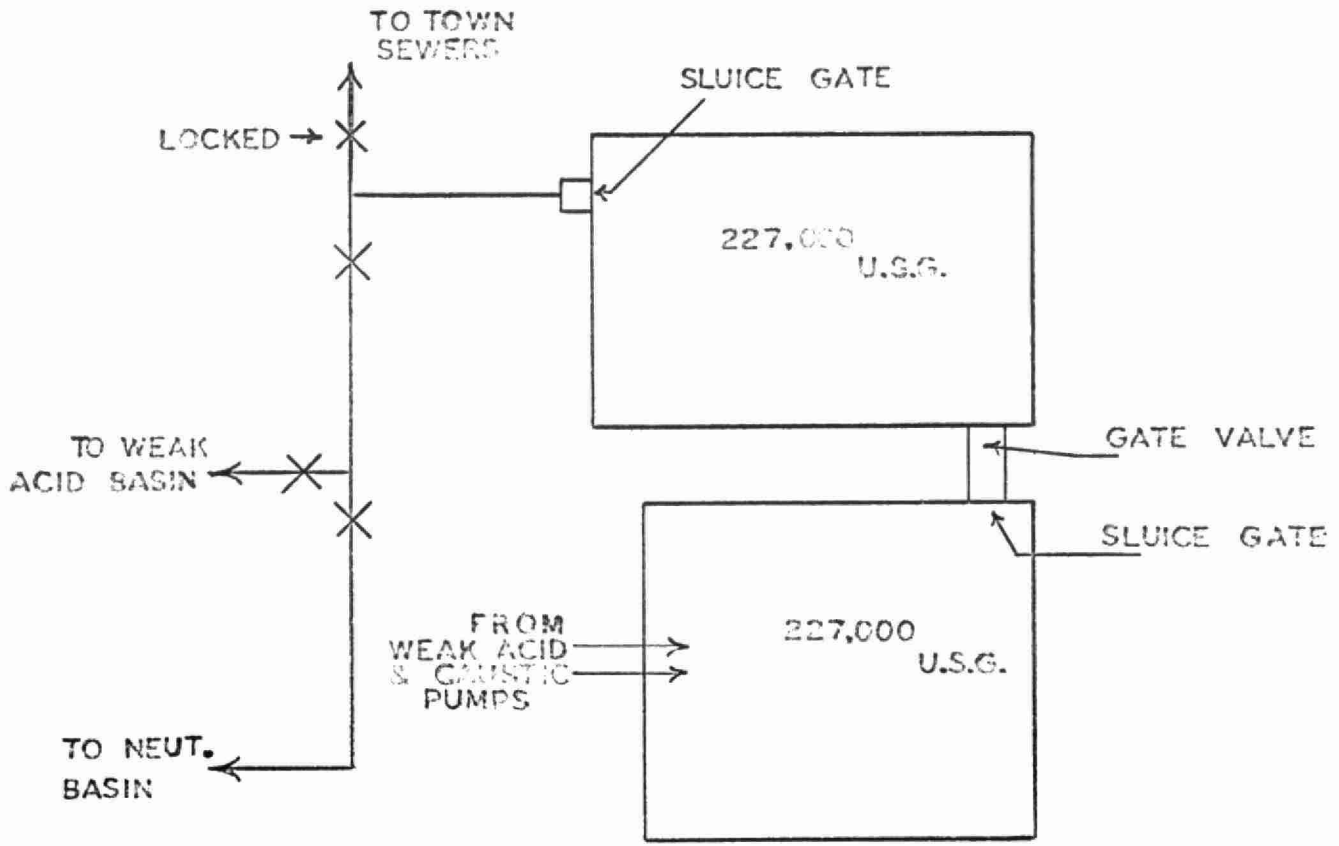

FIG. 3 LAGOON FACILITIES

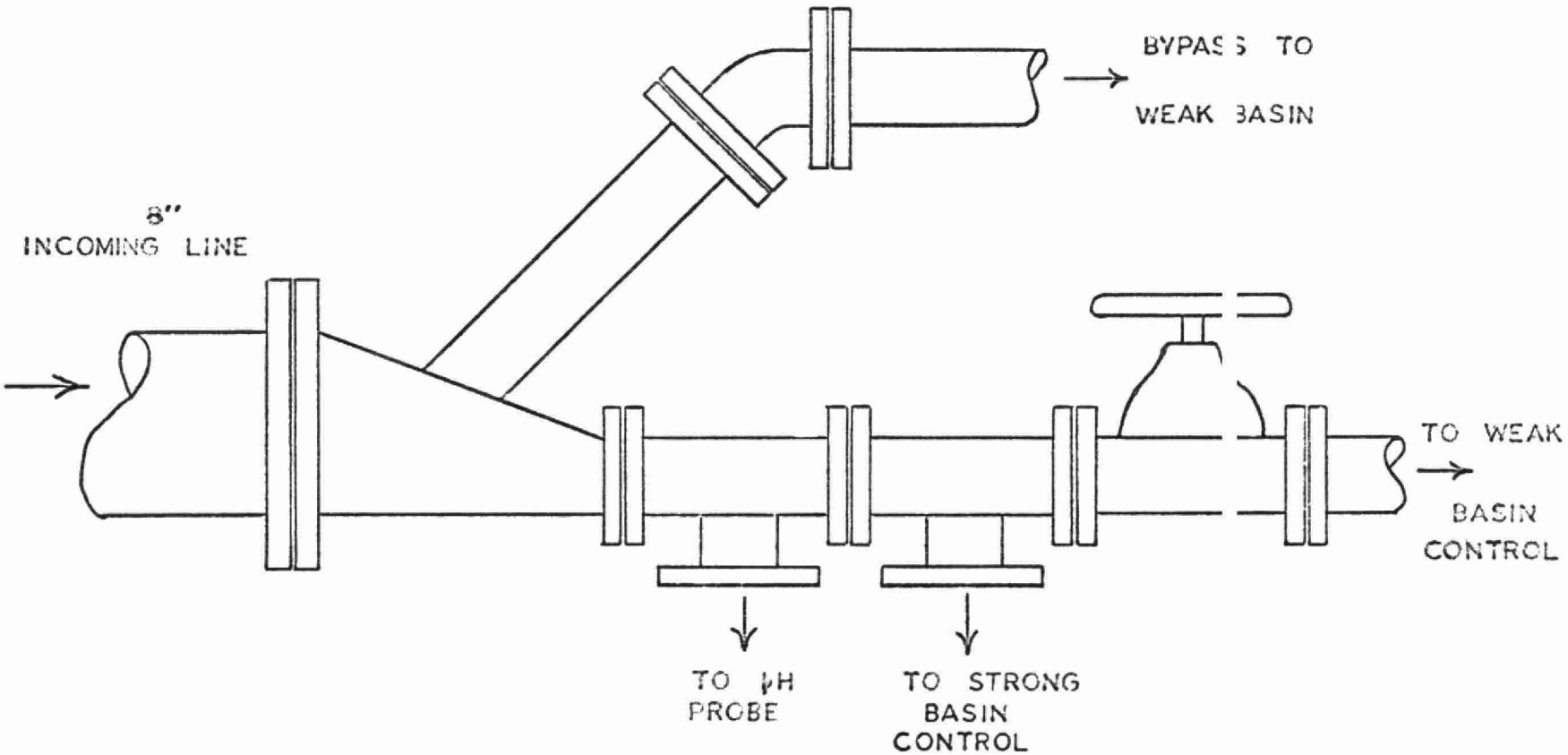

FIG. 4 HIGH FLOW BYPASS

SEVENTEENTH ONTARIO INDUSTRIAL WASTE CONFERENCE

REGISTRATION LIST

R.W. Allan, Superintendent,	BOROUGH OF SCARBOROUGH,	2001 Eglinton Ave. E., Toronto, Ontario.
B. Andrzejewski, Field Engineer,	ONTARIO RESEARCH FOUNDATION,	Sheridan Park, Ontario.
L.A. Atkinson, Project Engineer,	MARSHALL MACKLIN MONAGHAN,	1480 Don Mills Rd., Don Mills, Ontario.
W. Auckland, Technical Rep.	SWECO CANADA LTD.,	22 Jutland Rd., Toronto, Ontario.
G.A. Auld, Chief Chemist	J.T. DONALD & CO. LTD.,	35 Crockford Blvd., Scarborough, Ontario.
S.M. Baker, Chief Engineer,	THE PROCTER & GAMBLE CO. of CANADA LTD.,	Hamilton, Ontario.
A.J. Bannon, Supv., Utilities & Stores,	UNION CARBIDE CANADA LTD., Plastics & Chemicals	P.O. Box 5400, Belleville, Ontario.
D.G. Barker, Principal,	CANADIAN-BRITISH ENGINEERING	801 York Mills Rd., Toronto, Ontario.
B.B. Barnes, Chief,	N.B. WATER AUTHORITY, Industrial Wastes Section,	P.O. Box 1270, Fredericton, N.B.
M.G. Barrington, Vice President,	HISEY AND BARRINGTON LTD.,	7027 Yonge St., Willowdale, Ontario.
N. Barron, Development Chemist,	B.P. REFINERY,	P.O. Box 520, Oakville, Ontario.
T.J. Barry, Staff Engineer,	SHELL CANADA LTD.,	Sarnia Refinery, Corunna, Ontario.
E.J. Bartley, Manager,	FOUNDATION OF CANADA ENGINEERING CORP.,	505 Woodward Ave., Hamilton, Ontario.
Mrs. M.I. Beach, Vice President,	N-CON SYSTEMS CO. INC.,	410 Boston Post Rd., Larchmont, N.Y.
D.A. Bebbington, Works Manager,	DOMTAR CHEMICALS LIMITED, Tar & Chemical Division,	801 Lake Shore Blvd.W. Toronto 252, Ontario.
F.H. Bellstedt, Asst.Distillery Manager,	H. CORBY DISTILLERIES LTD.,	P.O. Box 10, Corbyville, Ontario.
J. Benner, Master,	ALGONQUIN COLLEGE,	200 Lees Ave., Ottawa, Ontario.

P. Berg-Johannessen, Technical Director,	DRYDEN PAPER COMPANY, LTD.,	Dryden, Ontario.
A. Bergs, Supervising Eng.,	FENCO,	2200 Yonge St., Toronto, Ontario.
Dr. F. Besik, Res. Engineer,	ONTARIO RESEARCH FOUNDATION,	Sheridan Park, Ontario.
J.E. Bindon, District Manager,	FLUIDTECH LTD.,	5220 Cherryhill Cres., Burlington, Ontario.
R.S. Binning, Sales Engineer,	GREEY MIXING EQUIPMENT CO.,	100 Miranda Ave., Toronto 19, Ontario.
B. Birrell, Sr.Development Eng.,	CAN-ENG CONSULTANTS LTD.,	2800 Montrose South, Niagara Falls, Ont.
J.E. Blaylock, Design Engineer,	FORD MOTOR CO.,	3001 Miller Road, Dearborn, Michigan.
P. Blundy, Pollution Control Eng.,	GULF CANADA,	Clarkson, Ontario.
G.S. Boa, Manager,	SWAN WOOSTER ENGINEERING,	Box 218, St.Catharines, Ont..
D.R. Bolten, Waste Control Eng.,	BORG-WARNER CHEMICAL & PLASTICS GROUP,	Box 68, Washington, W.Va.
G. Boudaud,	PROCTOR & REDFERN LIMITED,	75 Eglinton Ave. W., Toronto, Ontario.
B.M. Boyer, Regional Engineer,	DEPARTMENT OF NATIONAL HEALTH & WELFARE,	382 King St. East, Kingston, Ontario.
B.I. Boyko, Sr. Sewage Engineer,	ONTARIO WATER RESOURCES COMMISSION,	135 St. Clair Ave.W., Toronto 7, Ontario.
K.C. Bradley, Waste Control Coordinator,	UNIROYAL CHEMICAL	Elmira, Ontario.
W.A. Brechin, Gen.Supts. Office,	CANADA PACKERS LTD.,	95 St. Clair Ave. W., Toronto, Ontario.
C. Breton, Chemist	REGIE DES EAUX DU QUEBEC,	1995 Boul. Charest,St. Quebec City, Quebec.
R. Brighty,	KENT-CAMBRIDGE LTD.,	80 Doncaster Ave., Willowdale, Ontario.
T.M. Brock, Project Manager,	PROCTER & GAMBLE CO. OF CANADA,	Burlington St. East, Hamilton, Ontario.
K. Browne, Sales Manager,	WILLIAM R. PERRIN LTD.,	530 King St. East, Toronto, Ontario.
H. Bryson,	SMITH & LOVELESS,	c/o Procor Limited, Oakville, Ontario.

D. Buratto, Project Engineer,	C.G. RUSSELL ARMSTRONG ASSOCIATES LTD.,	317 Bartlet Bldg., Windsor, Ontario.
C. Burnside, Superintendent,	REGION OF NIAGARA,	St. Catharines, Ontario.
H.R. Butler, Tech.Asst.to Manager,	INTERNATIONAL NICKEL CO. Reduction Plants,	Copper Cliff, Ontario.
M.R. Cameron, Regional Manager,	PERMUTIT CO.,	285 Raleigh Ave., Scarborough, Ontario.
A.B. Campbell, Commissioner of Works,	CORPORATION TOWN OF TRENTON,	15 Dundas Street E., Trenton, Ontario.
J.A. Campbell,	BESTOBELL CONTROLS LIMITED,	235 Norseman St., Toronto 18, Ontario.
P.E. Cansfield, Assoc. Professor,	UNIVERSITY OF MANITOBA, Dept. of Food Science,	Fort Garry, Winnipeg 19, Manitoba.
D.P. Caplice, Director,	ONTARIO WATER RESOURCES COMMISSION,	135 St. Clair Ave. W., Toronto 7, Ontario.
R. Carr, Technical Sales Rep.,	FISCHER & PORTER (CANADA) LTD.,	134 Norfinch Dr., Downsview, Ontario.
R. Carrara, Alderman,	CITY OF CORNWALL,	1205 Third St. E., Cornwall, Ontario.
H. Carter, Manager,	SMITH & LOVELESS, Graver Water Conditioning,	Oakville, Ontario.
G.B. Caryll,	McNAMARA ENGINEERING LTD.,	14 Dorchester Ave., Toronto 18, Ontario.
M.J. Cathcart, Asst. to General Mgr.,	ONTARIO WATER RESOURCES COMMISSION,	135 St. Clair Ave.W., Toronto 7, Ontario.
D.S. Caverly, General Manager,	ONTARIO WATER RESOURCES COMMISSION,	135 St. Clair Ave.W., Toronto 7, Ontario.
D.B. Chadwick, Technical Director	KOMLINE-SANDERSON LTD.,	72 Orenda Road, Brampton, Ontario.
C.Y. Chai, Process Control Supv.,	EDDY FOREST PRODUCTS LTD.,	Espanola, Ontario.
M.F. Cheetham, Director,	ONTARIO WATER RESOURCES COMMISSION,	135 St. Clair Ave.W., Toronto 7, Ontario.
C.H. Chisholm, Vice President,	CHISHOLM MACHINERY SALES,	602 Erie Ave., Niagara Falls, Ont.

M.A. Chomyn, Sales Engineer,	EIMCO PROCESS OF CANADA,	165 Cartwright Ave., Toronto, Ontario.
J. Choquet, Industrial Planning Advisor,	GULF OIL CANADA LIMITED,	3501 Broadway, Montreal E., Quebec.
H.S. Chourasia, Colombo Plan Training,	ONTARIO WATER RESOURCES COMMISSION,	135 St. Clair Ave.W., Toronto 7, Ontario.
N.A. Chowdhry,	ONTARIO DEPARTMENT OF HEALTH,	1 St. Clair Ave.W., Toronto 7, Ontario.
N.K. Chung, Sr. Development Eng.,	DRAVO CORPORATION,	One Oliver Plaza, Pittsburgh, PA.15222.
E.J. Ciepiela, Manager,	FRANCIS HANKIN & CO. LTD.,	117 Crockford Blvd., Scarborough, Ontario.
T. Claridge, Reporter,	THE GLOBE & MAIL	King St., Toronto, Ontario.
B.J. Clarke,	BIRD MACHINE COMPANY,	2600 Wentz Ave., Saskatoon, Sask.
G.R. Clarke, Design Engineer,	DU PONT OF CANADA LIMITED,	P.O. Box 2100, Kingston, Ontario.
G.S. Clarke, President,	H.F. CLARKE LIMITED,	24 East Fourth Ave., Vancouver, B.C.
T. Cole, Planning & Estimating Engineer,	STEEL CO. OF CANADA,	Wilcox St., Hamilton, Ontario.
D.J. Collins, Chairman,	ONTARIO WATER RESOURCES COMMISSION,	135 St. Clair Ave.W., Toronto 7, Ontario.
K. Conn, Chemist,	DEPARTMENT OF ENERGY, MINES AND RESOURCES,	45 Spencer St., Ottawa 3, Ontario.
N. Conroy, Biologist,	ONTARIO WATER RESOURCES COMMISSION,	Box 213, Rexdale, Ontario.
T. Constantine, Design/Project Eng.,	NISBET LETHAM LTD.,	206 Water St., Sarnia, Ontario.
G.L. Cooper, Division Manager,	ONTARIO PAPER CO.,	Thorold, Ontario.
R.M. Cooper, Chemical Engineer,	CANADIAN INDUSTRIES LIMITED,	P.O. Box 10, Montreal 101, Quebec.
G.G. Copeland, President,	COPELAND SYSTEMS INC.,	120 Oakbrook Mall, Suite 220, Oak Brook, Ill.

W. Cormode, Sales Engineer,	DE LAVAL CO. LTD.,	115 Park Street, Peterborough, Ont.
R. Costello, Vice President,	ABITIBI PAPER CO., Operations,	Toronto Dominion Centre, Toronto, Ontario.
J. Cover, Project Manager,	GIFFELS ASSOCIATES LIMITED,	60 Adelaide St. E., Toronto, Ontario.
D.G. Cox, General Supt.	ELDORADO NUCLEAR LIMITED, Special Services,	215 John St., Port Hope, Ontario.
H.G. Cox, Manager,	RCA LIMITED, Plant Engineering,	Wye Valley Road, Midland, Ontario.
G. Coxhead, Project Engineer,	SIMON CARVES OF CANADA,	2025 Sheppard Ave.E., Willowdale, Ontario.
D. Craig, Research Director,	THE ONTARIO PAPER COMPANY LIMITED,	Thorold, Ontario.
J.V. Cross, Research Scientist,	OGILVIE FLOUR MILLS,	150 Simcoe St., London, Ontario.
G. Crossman,	FIELDING CROSSMAN & ASSOC.	232 Yorkland Blvd., Willowdale, Ontario.
A.V. Crouse, Technical Director,	N.S. WATER RESOURCES COMMISSION,	P.O. Box 2107, Halifax, Nova Scotia.
R.S. Cuthbertson, Plant Engineer,	NORTHERN ELECTRIC CO. LTD.,	Sise Rd., P.O. Box 5155, London 12, Ontario.
N. Czornyj,	SUN OIL COMPANY LIMITED,	Box 307, Sarnia, Ontario.
B.S. Das,	ONTARIO RESEARCH FOUNDATION,	Sheridan Park, Ont.
G. Das, Engineer,	VAN LUVEN CONSULTANTS LTD.,	5460 Connaught Ave., Montreal 265, Quebec.
R. Davies, Editor,	WATER AND POLLUTION CONTROL,	1450 Don Mills Rd., Don Mills, Ontario.
C.B. Davis, Vice President,	CRYSLER, DAVIS & JORGENSEN	5803 Yonge St., Willowdale, Ontario.
R.F. Day, Manager,	ALCHEM LIMITED, Product Market,	Burlington, Ontario.
R.R. Demisch, Head,	DEPARTMENT OF HEALTH, Consultant & Development,	1 St. Clair Ave. W., Toronto, Ontario.

P.J. Denison, Research Executive,	H.G. ACRES LTD.,	1259 Dorchester Rd., Niagara Falls, Ontario.
K. Dermott,	TECUMSETH TOWNSHIP,	R.R. 5, Cookstown, Ontario.
G.J. Dicke, Director of R & D,	CRANE CANADA LTD.,	1355 Martin Grove Rd., Toronto, Ontario.
MacKenzie Dickson, Vice President,	SEPARATOR ENGINEERING LTD.,	2387A Eglinton Ave. E., Scarborough, Ontario.
M. Dickson, Partner,	GIBB, ALBERY PULLERITS & DICKSON,	29 Gervais Drive, Don Mills, Ontario.
J. Diduch, Power Plant Engineer,	INTERNATIONAL NICKEL CO. OF CANADA LTD.,	Copper Cliff, Ontario.
B.A. Dineen, Manager,	EFFLUENT SYSTEMS LTD.,	1262 Don Mills Rd., Don Mills, Ontario.
J. Dudley,	AMES CROSTA MILLS CANADA LTD.,	90 Eglinton Ave. E., Toronto, Ontario.
D. Durant, District Manager,	WALLACE & TIERNAN LTD.,	925 Warden Ave., Scarborough, Ontario.
C.S. Dutton, Head,	PROCTOR & REDFERN, Process Department,	75 Eglinton Ave. E., Toronto 12, Ontario.
T.L. Easterbrook, Supervisor,	DU PONT OF CANADA LIMITED, Environmental Control,	Maitland, Ontario.
C.H. Eidt, Director of Eng.,	REGIONAL MUNICIPALITY OF NIAGARA,	P.O. Box 504, 150 Berryman Ave., St. Catharines, Ont.
H. Eijsenck,	ONTARIO WATER RESOURCES COMMISSION,	135 St. Clair Ave. W., Toronto 7, Ontario.
H.H. Eisler, Supv. of Eng.	STELCO, Air & Water Quality,	Wilcox Street, Hamilton, Ontario.
A.C. Elliott, Supt. Utilities,	THE STEEL COMPANY OF CANADA LTD.,	Hamilton, Ontario.
E.E. Erling, Partner,	WHITE MOSSOP & ERLING LTD.,	13 Race St., St. Catharines, Ont.
B. Fairhall, Sales	INFILCO CANADA LTD.,	1195 Sheppard Ave. E., Willowdale, Ontario.
W.C. Ferguson, Supervisor	THE INTERNATIONAL NICKEL COMPANY OF CANADA LTD.,	Copper Cliff, Ontario.

M. Filey, Chemical Technologist,	ONTARIO WATER RESOURCES COMMISSION,	135 St. Clair Ave. W., Toronto 7, Ontario.
R.H. Fletcher, Manager, Pollution Control,	FOUNDATION OF CANADA ENGINEERING CORP.,	2200 Yonge Street, Toronto, Ontario.
J.L. Forgie, Chief Engineer,	WALLACEBURG BRASS LTD., Design & Development,	Wallaceburg, Ontario.
T.R. Forty, Indust.Waste Control Eng.,	THE INTERNATIONAL NICKEL CO. OF CANADA LTD.,	Copper Cliff, Ontario.
G.E. Fraser,	ALCAN CANADA PRODUCTS,	Box 2000, Kingston, Ontario.
R.L. Frederick, Engineer,	W.J. WESTAWAY CO. LTD.,	394 Wilson Ave., Hamilton, Ontario.
H. French, Mgr.,Arch/Eng. Serv.,	CONSUMERS' GAS CO.,	19 Toronto St., Toronto, Ontario.
S.E. Frost, Health Physicist,	ELDORADO NUCLEAR LIMITED,	215 John St., Port Hope, Ontario.
A.E. Garred, Sr. Process Engineer,	STONE & WEBSTER CANADA LIMITED,	60 Adelaide St.E., Toronto 1, Ontario.
R. Gatley,	G.F. SEELEY & SON LTD.,	108 Skyway Ave., Rexdale, Ontario.
E. Gatza, Asst.Manager,	DOW CHEMICAL OF CANADA, Spec.Chem. Sales,	Sarnia, Ontario.
Major J.A. Geneau, Lecturer,	ROYAL MILITARY COLLEGE OF CANADA,	Kingston, Ontario.
A.J. Gilmore, Research Scientist,	DEPARTMENT OF ENERGY, MINES AND RESOURCES,	300 LeBreton St., Ottawa 1, Ontario.
A. Golomb, Research Scientist,	ONTARIO RESEARCH FOUNDATION,	Sheridan Park, Ontario.
H.M. Gomaa, Environmental Scientist,	FENCO,	2200 Yonge St., Toronto, Ontario.
A.A. Grant, Chemist,	CANADIAN NATIONAL RAILWAYS,	3950 Hickmore Ave., St. Laurent, Quebec.
W.J. Grant, Sr.Process Engineer,	GULF OIL CANADA,	800 Bay St., Toronto 166, Ontario.
C. Gray, Sales Engineer,	P.R. DONAHUE LTD., Walker Process Equipment,	Concord, Ontario.
D. Gray,	G.F. SEELEY & SON LTD.,	108 Skyway Ave., Rexdale, Ontario.

E.G. Gray, Tech. Sales,	SEPARATOR ENGINEERING LTD.,	2387A Eglinton Ave.E., Scarborough, Ontario.
M. Greenfield,	DOMINION FOUNDRIES AND STEEL,	Box 460, Hamilton, Ontario.
H.C. Greer, Marketing Manager,	NEPTUNE METERS LTD.,	3526 Lake Shore Blvd.W., Torotno 14, Ontario.
J.L. Greer, Vice President,	W.L. WARDROP & ASSOCIATES LTD.,	456 Notre Dame Ave., Winnipeg 2, Manitoba.
G.A. Grosse, Engineer,	ONTARIO WATER RESOURCES COMMISSION,	411 Donald St. E., Thunder Bay, Ontario.
W.E. Grove, Plant Engineer,	L.O.F. GLASS OF CANADA LTD.,	Box 158, Collingwood, Ontario.
H. Grunwell,	THE GRUNWELL ASSOC. LTD.,	2209 Bostock Plaza, Clarkson, Ontario.
J.W. Gunn, Pollution & Corrosion Control Engineer,	SUN OIL COMPANY LIMITED,	Box 307, Sarnia, Ontario.
C.F. Gurnham, President,	GURNHAM AND ASSOCIATES LTD.,	223 W.Jackson Blvd., Chicago, Illinois
A.S. Gwyn, Plant Chemist,	UNION CARBIDE CANADA LTD.,	P.O. Box 700, Pointe-aux-Trembles,Que.
C.E. Hailes, Chemist,	TEXACO CANADA,	Port Credit, Ontario.
J. Hall, Supervisor,	CANADIAN HANSON & VAN WINKLE CO. LTD.,	45 Vansco Rd., Toronto 540, Ontario.
W.A. Hamilton, Commissioner of Works,	CORPORATION OF THE TOWN OF STREETSVILLE,	327 Queen Street S., Streetsville, Ontario.
C.D. Hannah, Design & Services Supt.,	MILLHAVEN FIBRES LTD.,	P.O. Box 2800, Kingston, Ontario.
J.D. Hardy, Supt. W.P.C.,	CITY OF WOODSTOCK,	928 Devonshire Ave., Woodstock, Ontario.
W. Harris,	CANRON LTD.,	Toronto, Ontario.
J.G. Harwood, Production Chemist,	TCF OF CANADA LIMITED,	P.O. Box 159, Cornwall, Ontario.
M. Havery, Supv., Market Research,	CANADA COLOURS & CHEMICALS,	1090 King St. West, Toronto, Ontario.

F.A. Havlik, Manager,	INFILCO CANADA LTD.,	721 Progress Ave., Scarborough, Ontario.
D.F. Heamey, Manager,	DRAVO W & WT Department,	1 Oliver Plaza, Pittsburgh, PA 15222.
G.W. Heinke, Associate Professor,	UNIVERSITY OF TORONTO, Dept. of Civil Engineering,	35 St. George St., Toronto, Ontario.
J. Henshaw, Mgr., Business Dev.	BOHNA ENG & RESEARCH,	797 Don Mills Rd., Don Mills, Ontario.
B. Herner, Sales Representative,	CALGON CORPORATION CANADA LTD.,	185 Eileen Ave., Toronto 9, Ontario.
D. Hickling, Manager	GRAVER WATER/SMITH & LOVELESS,	Third Line, Oakville, Ontario.
E.C. Hiller, Chemist,	HAHN BRASS LTD.,	Victoria St., New Hamburg, Ontario.
N.C. Hillier, Asst. to Manager,	INTERNATIONAL NICKEL CO. OF CANADA LTD.,	Davis St., Port Colborne, Ontario.
A. Himsley, President,	HIMSLEY ENGINEERING LTD.,	34 Front St. W., Toronto 1, Ontario.
J.D. Hisey, President,	HISEY AND BARRINGTON LTD.,	7027 Yonge St., Willowdale, Ontario.
B. Hitchcock, Project Manager,	GIFFELS ASSOCIATES LTD.,	60 Adelaide St.E., Toronto, Ontario.
H.R. Holland,	IMPERIAL OIL ENTERPRISES LTD.,	Box 3015, Sarnia, Ontario.
J. Hollick,	AER-O-FLO MFG.,	42 James T. N., Hamilton, Ontario.
R. Holloway,	HIMSLEY ENGINEERING LTD.,	34 Front St. W., Toronto 1, Ontario.
W.A. Holowacz, Area Supv.,	REGIONAL NIAGARA, Pollution Control,	Box 202, Welland, Ontario.
M.T. Homan, Environmental Eng.,	DOMINION FOUNDRIES & STEEL CO.,	Box 460, Hamilton, Ontario.
F. Hopkins, President,	POWER PLANT SUPPLY CO.,	P.O. Box 715, Oakville, Ontario.
L.E. Horembala, Mgr.,Consulting Services,	ALCHEM LTD.,	Burlington, Ontario.
H.W. Hotchkiss, Eng.Services Supt.,	KIMBERLY CLARK OF CANADA LTD.,	St. Catharines, Ontario.

R. Hussain, Engineer,	ONTARIO WATER RESOURCES COMMISSION,	135 St. Clair Ave.W., Toronto 7, Ontario.
D.J. Hutchison, Manager,	U.S. FILTER (CANADA) LTD.,	1460 Don Mills Rd., Don Mills, Ontario.
J. Hvilivitzky,	NIAGARA FALLS REVIEW,	Niagara Falls, Ontario.
J. Intihar, Tech. Sales Rep.,	FISCHER & PORTER,	134 Norfinch Ave., Toronto, Ontario.
S.P. James, Colombo Plan Trainee,	ONTARIO WATER RESOURCES COMMISSION,	135 St. Clair Ave.W., Toronto 7, Ontario.
J. Jeffreys,	PROCTOR & REDFERN LIMITED,	75 Eglinton Ave. W., Toronto 315, Ontario.
A. Stoddard Jones, Production Manager,	LUBRIZOL OF CANADA, LTD.,	1800 Thorold Stone Rd., Niagara Falls, Ontario.
D. Jones, Manager,	TECHNICAL SECTION, CANADIAN PULP & PAPER ASSOCIATION,	2300 Sunlife Building, Montreal 110, Quebec.
F. Jones,	TORONTO STAR, Editorial Department,	80 King Street West, Toronto, Ontario.
H.M. Jones, Manager,	LAMBTON INDUSTRIAL SOCIETY,	Suite 111, 560 Exmouth St. Sarnia.
K.H. Jones, Production & Plant Eng. Manager,	THOMPSON PRODUCTS LTD.,	230 Louth Street, St. Catharines, Ont.
T. Joyce, Technical Rep.,	CANADIAN HANSON & VAN WINKLE CO. LTD.,	45 Vansco Rd., Toronto 540, Ontario.
R. Kemp, Asst. Foreman,	DOMTAR CHEMICALS,	725 Streathearne Ave.N., Hamilton, Ontario.
K. Keshvani, Environmental Eng.,	RIO ALGOM MINES LTD.,	Elliot Lake, Ontario.
C.W. Kinser, Asst. Sales Manager,	ARTHUR G. MCKEE & CO. OF CANADA,	400 Terminal Warehouse Toronto, Ontario.
N.A. Klodniski, Eng. of Construction,	CANADIAN NATIONAL RAILWAYS,	P.O. Box 8100, Montreal, Quebec.
R.R. Kmiec, Engineer,	IBM - CANADA,	844 Don Mills Rd., Don Mills, Ontario.

P.D. Knox, Tech. Rep.	SWECO CANADA,	22 Jutland Rd., Toronto, Ontario.
J. Koshurba, Design Engineer,	CITY OF HAMILTON,	City Hall, Hamilton, Ontario.
D. Kovachevich, Supt. Proc.Dev.	SEAGRAMS,	Lasalle, Quebec.
N.S. Kuhn, Sales Manager,	BRISTOL CO. OF CANADA LTD.,	234 Attwell Dr., Rexdale, Ontario.
E. Kupchanko, Head,	ALBERTA DEPARTMENT OF HEALTH, Water Pollution Control,	Administration Building, Edmonton, Alberta.
P.J. LaBelle, Operations Manager,	MARBON DIVISION,	Box 10, Cobourg, Ontario.
J.G. Lamont, Research Engineer,	CANADIAN NATIONAL RAILWAYS,	3950 Hickmore Ave., St. Laurent, Quebec.
E.A. Lancaster, Product Manager,	CANADIAN INDUSTRIES LTD.,	630 Dorchester Blvd., Montreal, Quebec.
V.W. Langworthy, Editor,	WATER & SEWAGE WORKS,	4601 West Saginaw St., Lansing, Michigan.
L. Larson, Engineer,	REGIONAL MUNICIPALITY OF OTTAWA-CARLETON,	111 Sussex Drive, Ottawa, Ontario.
M. Lauder, Sanitary Drainage Eng.,	BOROUGH OF ETOBICOKE,	550 Burnhamthorpe Rd., Etobicoke, Ontario.
P. Laughton, Project Engineer,	R.V. ANDERSON ASSOC. LTD.,	194 Wilson Ave., Toronto 12, Ontario.
M.R. Laundry, Consulting Engineer,	PROSEARCH LTD.,	505 North Service Rd.E., Oakville, Ontario.
P. Lawrence, Salesman,	LEE CHEMICALS,	1119 Yonge St., Toronto, Ontario.
G.T. Lawton, Mech.Engineer,	W.P. LONDON & ASSOC. LTD.,	P.O. Box 1025, Dorchester Rd.S. Niagara Falls, Ont.
W.G.G. Lindley, Production Manager,	UNION CARBIDE CANADA LTD.,	p.O. Box 5400, Belleville, Ontario.
D.W. Lishman, Project Engineer,	KILBORN ENGINEERING LTD.,	36 Park Lawn Rd., Toronto, Ontario.
W.G. Lobban, Supervising Project Eng.,	ONTARIO HYDRO,	620 University Av., Toronto, Ontario.

C.D. Logan, Ass.Director,	ONTARIO PAPER CO. LTD., Chemical Research,	Thorold, Ontario.
R.H. Love,	DOW CHEMICAL CANADA LTD.,	250 Bloor St. E., Toronto, Ontario.
B. Lumsden, Vice President,	JAMES F. MACLAREN LIMITED,	321 Bloor St. E., Toronto, Ontario.
J.D. Luyt, Field Engineer,	ONTARIO WATER RESOURCES COMMISSION,	135 St. Clair Ave.W., Toronto 7, Ontario.
S.A. MacKay, Manager,	CYANAMID OF CANADA LTD., Tech.Services - Mining,	Toronto, Ontario.
J.A. MacKenzie, Vice President,	H.G. ACRES LTD.,	20 Victoria St., Toronto, Ontario.
D.S. Madill,	C.G. RUSSELL ARMSTRONG,	317 Bartlet Bldg., Windsor, Ontario.
J.A. Malcomson, District Manager,	PENNWALT CORPORATION SHARPLES,	14700 Detroit Rd., Cleveland, Ohio.
M. Malette, Technician,	DEPARTMENT OF ENERGY, MINES AND RESOURCES,	45 Spencer Street, Ottawa 3, Ontario.
O. Manning, General Manager,	COMMERCIAL FILTERS CANADA LTD.,	1179 Caledonia Rd., Toronto 19, Ontario.
S. Manson, Utilities Supervisor,	B.P. REFINERY,	P.O. Box 520, Oakville, Ontario.
A. Marchetti, Alderman,	BOROUGH OF ETOBICOKE,	111 Batfield Ave., Islington, Ontario.
W.J. Marshall, Environmental Control Coordinator,	NORANDA MINES LIMITED,	1700 Bank of Nova Scotia, 44 King St., Toronto, Ontario.
O. Martini, Project Engineer,	JAMES F. MACLAREN,	321 Bloor St. East, Toronto, Ontario.
J. Matthews, Technical Sale Rep.	FISCHER & PORTER CAN. LTD.	134 Norfinch Drive, Downsview, Ontario.
B. May, Plant Manager,	MAPLE LODGE FARMS,	R.R. 2, Norval, Ontario.
K.M. Mayall, Biologist,	PROVINCE OF ONTARIO,	19 Jason Rd., Rexdale, Ontario.
J.R. McCallum Quality Control Supt.,	DOMTAR FINE PAPERS,	Cornwall, Ontario.

R. McClean, Sales Rep.,	JOHNS-MANVILLE	Port Credit, Ontario.
H.F. McCoubrey, Pollution Control Eng.,	REGIONAL NIAGARA,	Box 504, 150 Berryman Ave. St. Catharines, Ont.
W.G. McGorman, Supt. Utilities,	ALGOMA STEEL CORP. ,	Sault Ste. Marie, Ontario.
R.J. McGowan,	GENERAL FILTRATION AND ENGINEERING,	217 Midwest Rd., Scarborough, Ont.
J.J. McGrath, Metallurgical Manager,	ANACONDA AMERICAN BRASS LIMITED,	260 Eighth Street, Toronto 510, Ontario.
T.A. McIver, Technical Supt.,	SHELL CANADA (CORUNNA REFINERY),	Corunna, Ontario.
F.D. McKenzie, Councillor,	REGIONAL MUNICIPALITY OF NIAGARA,	R.R. #1, St. Catharines, Ont.
R.S. McKittrick, Regional Engineer,	NEPTUNE MICROFLOC,	3526 Lakeshore Blvd.W., Toronto, Ontario.
J. McLarnen, Waste Control Chemist,	UNIROYAL CHEMICAL,	Elmira, Ontario.
P. McLaughlin, Tech.Sales Rep.,	CYANAMID OF CANADA,	1 City View Dr., Toronto, Ontario.
T.H. McMullan, Hydraulic Engineer,	CANADIAN INDUSTRIES LTD.,	630 Dorchester Blvd.W., Montreal, Quebec.
W.A. McNair, Asst. Dist. Manager,	WORTHINGTON CANADA LTD.,	4180 Dundas St. W., Toronto 18, Ontario.
J. McNamara, Superintendent,	REGION OF NIAGARA,	P.O. Box 504, St. Catharines, Ont.
S.A. McWilliams, Sales Engineer,	CONTROL & METERING LTD.,	148 Cummer Ave., Willowdale, Ontario.
G.W. Mears, Supt. of Laboratories,	ALCAN ALUMINUM CORPORATION,	P.O. Box 28, Oswego, N.Y. 13126.
H. Meikle,	AMES CROSTA MILLS CANADA LTD.,	90 Eglinton Ave. E., Toronto, Ontario.
H.W. Meyfarth, Editor,	ENGINEERING DIGEST,	46 St.Clair Ave. E., Toronto, Ontario.
B. Miller, Process Engineer,	POLYMER CORPORATION,	Vidal St., Sarnia, Ontario.

R.H. Millest, Chief, Water Quality Div.,	DEPARTMENT OF ENERGY, MINES AND RESOURCES,	Carling Ave., Ottawa, Ontario.
R.E. Mills, Head, Wastewater Treatment Section,	DEPARTMENT OF ENERGY, MINES AND RESOURCES,	45 Spencer St., Ottawa, Ontario.
H. Mitchell, Manager, Industrial Div.,	DEGREMONT CANADA LTD.,	2015 Drummond St., Montreal, Quebec.
G. Mizuno, Project Engineer,	DOMTAR CHEMICALS LTD.,	725 Strathearne Ave.N., Hamilton, Ontario.
R.G. Mondoux, Marketing Manager,	EIMCO PROCESS OF CANADA, Water & Waste,	165 Cartwright Ave., Toronto, Ontario.
B.E. Moore, Reg. Manager,	BLACK CLAWSON KENNEDY LTD.,	534 Lawrence Ave.W., Toronto, Ontario.
J.G. Monteith, Technologist,	TOWN OF MISSISSAUGA,	Dundas St., Cooksville, Ontario.
B. Morris, Environmental Control Officer,	ELECTRIC REDUCTION CO. OF CANADA,	2 Gibbs Rd., Islington, Ontario.
M.J. Morris, Industrial Waste Eng.,	INTERNATIONAL NICKEL CO. OF CANADA LTD.,	Copper Cliff, Ontario.
H.C. Morrison, Treasurer/Director,	MANDEM CORPORATION LIMITED,	576 Wall Street, Winnipeg 10, Manitoba.
N.A. Morrison, Supv.	THE STEEL CO. OF CANADA,	Wilcox St., Hamilton, Ontario.
M. Mukerjee, Plant Engineer,	CANADIAN JOHNS- MANVILLE,	West Hill P.O., Ontario.
K.L. Murphy, Assoc. Professor,	MCMASTER UNIVERSITY,	Hamilton, Hamilton, Ontario.
E.G. Myers, Industrial Waste Control Officer,	CITY OF CORNWALL,	1312 Montreal Rd., Cornwall, Ontario.
K.S. Ng, Biochemical Engineer,	ABITIBI PAPER CO. LTD.,	Sheridan Park, Ontario.
H. Nierstrasz, Chief Chemist,	NORTHERN ELECTRIC CO. LTD.,	8200 Dixie Rd., Bramalea, Ontario.
T.J. Nolan, Sr.Planning Engineer,	ATLAS STEELS CO., A Division of Rio Algom Mines,	Welland, Ontario.

J.D. Norman, Associate Professor,	MCMASTER UNIVERSITY, Chemical Engineering,	Hamilton, Ontario.
A. Oda, Research Engineer,	ONTARIO WATER RESOURCES COMMISSION,	P.O. Box 213, Rexdale, Ontario.
A. O'Donohue, Executive	METRO COUNCIL,	City Hall, Queen St., Toronto.
U. Oko, Research Metallurgist,	FALCONBRIDGE NICKEL MINES,	Falconbridge, Ontario.
D.O. Osmun, Manager,	CHRYSLER CANADA LTD., Construction & Facility Eng.,	Windsor, Ontario.
G. Palmer, Supervisor,	CONSUMER'S GAS CO., Field Operations,	19 Toronto St., Toronto, Ontario.
M.D. Palmer, Environmental Eng.,	ONTARIO WATER RESOURCES COMMISSION,	135 St. Clair Ave.W., Toronto 7, Ontario.
M. Paraschak, Technical Supervisor,	ALLIED CHEMICAL,	Amherstburg, Ontario.
R.R. Parker,	REID, CROWTHER & PARTNERS LTD.,	797 Don Mills Rd., Don Mills, Ontario.
J. Peake, Special Rep.	SUN OIL CO. LTD.,	85 Bloor St. E., Toronto, Ontario.
E.B. Pearson, Associate,	ATKINS HATCH & ASSOCS.,	37 Bloor St. West, Toronto, Ontario.
S. Peters, Sales Engineer,	WORTHINGTON (CANADA) LTD.,	4180 Dundas St.W., Toronto, Ontario.
R. Phoenix, Supervisor,	ONTARIO WATER RESOURCES COMMISSION,	135 St. Clair Ave.W., Toronto, Ontario.
W.M. Pinkerton, Sr. Sanitary Engineer,	MARSHALL MACKLIN MONAGHAN LTD.,	1480 Don Mills Rd., Don Mills, Ontario.
G.L. Polischuk, Mgr.,	NORTHERN ELECTRIC CO. LTD., Facilities & Apparatus Eng.,	Box 3000, Brampton, Ontario.
D.A. Poole, Manager,	M.M. DILLON LTD., Water Resources Division,	P.O. Box 426, Stn.B., London, Ontario.
T. Posgate, Representative,	LEE CHEMICALS,	Toronto, Ontario.
A. Price, Sr. Mech.Engineer,	GENERAL MOTORS,	St. Catharines, Ontario.

S.A. Qureshi, Colombo Plan Trainee,	ONTARIO WATER RESOURCES COMMISSION,	135 St. Clair Ave.W., Toronto 7, Ontario.
E. Raia, Associate Editor,	INDUSTRIAL WATER ENGINEERING,	373 5th Ave., New York City 10016.
L.D. Read, Facilities Engineer,	CANADIAN GENERAL ELECTRIC,	107 Park St. N., Peterborough, Ontario.
B. Reed, Superintendent,	REGION OF NIAGARA,	P.O. Box 504, St. Catharines, Ontario.
C.B. Reid, Sr. Technicalman,	BF GOODRICH CHEMICAL,	Box 1026 Niagara Falls, Ontario.
R.E. Reid, Pollution Control Coordinator,	CYANAMID OF CANADA,	Welland Plant, Niagara Falls, Ontario.
S.G. Reid,	ONTARIO RESEARCH FOUNDATION, Dept. of Organic Chem.,	Sheridan Park, Ontario.
L.S. Richman, Asst. Plant Engineering Manager,	ORENDA LIMITED,	Box 6001, Toronto International Airport, Ontario.
L.A. Robb, Plant Chemist,	ETHYL CORPORATION OF CANADA LTD.,	Corunna, Ontario.
G. Robertson, Sanitation Engineer	CITY OF LONDON, Engineer's Department,	City Hall, Dundas St., London,Ont.
D.M. Robinson, Pollution Control Specialist,	BORG WARNER CORPORATION, Chem. & Plastics Group,	Box 959, Parkersburg, W.Va.26101.
G.A. Roeder, Research Associate,	STEEL CO. OF CANADA,	Wilcox Street, Hamilton, Ontario.
L.S. Romano, Director Sewage Treatment	CORPORATION OF CITY OF WINDSOR,	4155 Main St., Windsor, Ontario.
J.H.H. Root, Vice Chairman,	ONTARIO WATER RESOURCES COMMISSION,	135 St. Clair Ave.W., Toronto 7, Ontario.
R.H. Rosen, Manager,	H.J. HEINZ CO. OF CANADA, Engineering & Mtce.,	Leamington, Ontario.
R.D. Ross, Senior Engineer,	ABITIBI-PROVINCIAL PAPER LTD.,	R.R. 1, Thorold, Ontario.
R.E. Sanderson, Public Works,	REGIONAL NIAGARA,	St. Catharines, Ontario.

J. Saugen, Asst. Chief Mechanical Engineer,	GIFFELS ASSOCIATES LTD.,	60 Adelaide St.E., Toronto 210, Ontario.
E.S. Savage, Mgr.,Research and Development,	DRAVO CORPORATION, Water & Waste Treatment Dept.,	One Oliver Plaza, Pittsburgh, PA.15222.
D.G. Schell, Technical Supt.,	CANADIAN INDUSTRIES LTD.,	P.O. Box 1299, Cornwall, Ontario.
H. Schlosser, Development Supervisor,	DOMTAR CHEMICALS LIMITED, Tar & Chemical Division,	801 Lake Shore Blvd.E., Toronto 252, Ontario.
J.W. Schmidt, Scientific Officer,	DEPARTMENT OF ENERGY, MINES AND RESOURCES,	45 Spencer Street, Ottawa 3, Ontario.
C.C. Schroeder, Designer - Civil Eng.,	Stelco,	Hilton Works, Hamilton, Ontario.
M. Schwartz, Sanitary Eng. Dept. Head,	M.M. DILLON LIMITED,	P.O. Box 426, London 12, Ontario.
G.T.G. Scott, President,	CANADIAN-BRITISH ENGINEERING CONSULTANTS LTD.,	801 York Mills Rd., Don Mills, Ontario.
O.S. Scudamore, Senior Project Eng.,	H.G. ACRES LTD.,	20 Victoria St., Toronto, Ontario.
K.H. Sharpe, Asst. General Manager,	ONTARIO WATER RESOURCES COMMISSION,	135 St. Clair Ave.W., Toronto 7, Ontario.
W. Sheresky, Marketing Assistant,	ATLAS CHEMICAL INDUSTRIES CAN. LTD.,	P.O. Box 1085, Brantford, Ontario.
G. Sigal,	PROCTOR & REDFERN LIMITED,	75 Eglinton Ave.W., Toronto 315, Ontario.
R.L. Smart, Chemical Technologist,	BEARDMORE & CO. LTD.,	Acton, Ontario.
D. Smith, Technical Rep.,	ALCHEM LTD.,	211 Lakeshore Rd., Oakville, Ontario.
J.L. Smith, Control Dept.,	ONTARIO PAPER CO. LTD.,	Thorold, Ontario.
Mrs. J.M. Smith, Councillor,	NORTH GWILLIMBURY TOWNSHIP,	Lake Simcoe, Ontario.
S.E. Smith, Manager,	ENVIRONMENT/ONE, Industrial Wastewater Acts.,	866 Albany-Shaker Rd., Latham, N.Y.12110.
M. Sobolov, Supt.,Lab. Services,	HIRAM WALKER & SONS,	Walkerville, Ontario.

W.D.Stevens, Commissioner of Industries,	CITY OF KINGSTON,	City Hall, Kingston, Ontario.
T.G. Stevens, Supv.,Chemistry Section,	CANADIAN CANNERS LIMITED RESEARCH CENTRE,	Box 5032,1101 Walkers Line, Burlington, Ont.
J.M. Stonehouse, Chief Chemist,	LUBRIZOL OF CANADA LTD.,	Box 598, Niagara Falls, Ontario.
J.B. Sutherland, Manager,	DORR-OLIVER-LONG LIMITED, Marketing Research,	175 West St. S., Orillia, Ontario.
W.M. Swann, Borough Engineer,	BOROUGH OF ETOBICOKE,	550 Burnhamthorpe Rd., Etobicoke, Ontario.
F.J. Sweeney, Sr. Process Chemist,	SHELL CANADA LTD.,	Oakville Refinery, Box 308,Oakville, Ont.
J. Tai-Pow, Radiochemist,	ONTARIO DEPARTMENT OF HEALTH, Radiation Protection Lab.,	360 Christie St., Toronto 176, Ontario.
W.S. Tait, Program Coordinator,	NATIONAL HEALTH & WELFARE, Public Health Engineering,	Tunney's Pasture, Ottawa, Ontario.
C.N. Taylor,	POWER PLANT SUPPLY,	Oakville, Ontario.
A.Telibyn, Pollution Control Officer,	TOWN OF BURLINGTON,	City Hall, 426 Brant St., Burlington, Ontario.
G. Tertipis, Res. Chemist,	GULF OIL CANADA,	2489 N.Sheridan Way, Sheridan Park, Ontario.
W.H. Thomas, Technical Service Rep.,	CYANAMID OF CANADA,	1 City View Dr., Rexdale, Ontario.
G.E. Thompson, Refinery Engineer,	CANADA PACKERS LTD.,	2200 St.Clair Ave.W., Toronto 167, Ontario.
J.N. Thomson, Economist,	GOVERNMENT OF CANADA, ENERGY, MINES & RESOURCES,	Box 5050, Burlington, Ontario.
Miss B. Tomlinson, Freelance Broadcaster,	CBC,	70 Lowther Ave., Toronto 5, Ontario.
J.R. Townsend, Mgr.,Sales & Engrg.,	PENNWALT-SHARPLES,	1880 Kipling Ave., Rexdale,Ontario.
A.R. Townsend, Head, Water Pollution Research,	DEPARTMENT ENERGY, MINES	4486 Tremineer Ave., Burlington, Ontario.
A. Trueman, Facilities Engineer,	AMERICAN MOTORS (CANADA) LTD.,	Brampton, Ontario.

J.A. Turner, Plant Engineer,	LIBBY MCNEILL & LIBBY CANADA LTD.,	330 Richmond Street, Chatham, Ontario.
J.R.Turner, Tech. Assistant,	ALLIED CHEMICAL CANADA LTD.,	100 N. Queen St., Toronto, Ontario.
L. Undup, Project Engineer,	CANADA PACKER,	2200 St. Clair Ave.W., Toronto, Ontario.
V. Uzbalis,	DEARBORN CHEMICAL COMPANY LTD.,	3333 Cavendish Blvd., Room 18, Montreal, Que.
H.R. Valdez,	WILSON DARIO & VALDEZ LTD.,	1534 Windsor Ave., Windsor, Ontario.
J.A. Vance,		Box 83, Woodstock.
B. Van Lammers,	GRAVER W.C., PROCOR LTD.,	3rd Line, Oakville, Ontario.
A.L. Van Luven, President,	VAN LUVEN CONSULTANTS LTD.,	5460 Connaught Ave., Montreal 265, Que.
A. Venerus, Tech.Sales Rept.,	CANADA COLOURS & CHEMICALS,	1090 King St. W., Toronto, Ontario.
F.A. Voege, Asst.General Manager,	ONTARIO WATER RESOURCES COMMISSION,	135 St. Clair Ave.W., Toronto 7, Ontario.
A.J. Von Zuben, Chief Pl/Htg. & Ind.Waste,	TOWN OF MISSISSAUGA,	100 Dundas St. W., Cooksville, Ontario.
H.L. Walker, Group Leader,	GULF OIL CANADA LTD., Envir. Studies,	Sheridan Park, Ontario.
A.R. Wallace, Manager,	PUMPS & SOFTENERS LTD., Engineered Products,	680 Waterloo St., London, Ontario.
H.G. Walton, Sales Rep.,	CANADIAN JOHNS MANVILLE CO. LIMITED,	565 Lakeshore Rd.E., Port Credit, Ontario.
G.B. Ward, President,	ENVIRONMENTAL RESOURCES CONSULTANTS LTD.,	P.O. Box 1301, Fredericton, N.B.
O. Washburn,	UNIROYAL RESEARCH LABS.,	120 Huron St., Guelph, Ontario.
J.A. Watson, Plant Engineer,	GENERAL MOTORS OF CANADA,	St. Catharines, Ontario.
J. Watson, Engineer,	FLUIDTECH LTD.,	48 Lakeshore Rd., Pointe Claire, P.Q.

L. Webber,	UNIVERSITY OF GUELPH, Dept. of Soil Science,	Guelph, Ontario.
A.L. Welker, Plant Engineer,	BORG WARNER (CANADA) LIMITED, Long Manufacturing Division,	656 Kerr Street N., Oakville, Ontario.
B.E. Werenskiold, Sr. Consultant,	RUST ASSOC. LTD., MONTREAL,	Mississauga, Ontario.
C.M. Wheeler, Vice President,	COPELAND PROCESS CANADA,	Place Ville Marie, Montreal, Quebec.
T.E. White, Pollution Control Supt.,	CITY OF OSHAWA,	50 Centre Street, Oshawa, Ontario.
R. Whitehead, Principal Chemist,	JAMES F. MACLAREN LTD.,	320 Adelaide St. S., London 42, Ontario.
P.W. Williams, District Pipe Mgr.,	CANADIAN JOHNS MANVILLE CO.,	565 Lakeshore Rd., Port Credit, Ontario.
H.G. Willsie, Production Manager,	LEVER DETERGENTS LIMITED,	1 Sunlight Park Rd., Toronto 250, Ontario.
G. Willson, Mayor,	REGIONAL NIAGARA,	Grimsby, Ontario.
G.E. Wilson, Vice President,	LABATT BREWERIES OF CANADA, Engineering,	P.O. Box 5050, London, Ontario.
H.S. Wilson, Environmental Control Coordinator,	ESSO CHEMICAL CANADA,	P.O. Box 3004, Sarnia, Ontario.
J.A. Wilson, Supv.,	REX CHAINBELT (CANADA) LTD., Environmental Control Equip.,	1181 Sheppard Ave. E., Willowdale, Ontario.
N. Woollings, Technical Manager,	ALCHEM LTD., Consulting Services,	P.O. Box 5002, Burlington, Ontario.
K. Yamaji, Senior Chemist,	SPRUCE FALLS POWER AND PAPER,	Kapuskasing, Ontario.
M. Yatabe, Engineer,	GORE & STORRIE LTD.,	980 Yonge St., Toronto 5, Ontario.
R. Yeoman,	CANADA WIRE AND CABLE,	147 Laird Dr., Toronto, Ontario.
D.C. Young, Engineer,	METRO TORONTO WORKS DEPT.,	11th E, City Hall, Toronto, Ontario.

W.A. Young, Plant Manager,	CANADIAN JOHNS MANVILLE CO.,	West Hill P.O., Ontario.
W. Zentner, Product Manager,	WALKER PROCESS EQUIPMENT,	840 N. Russell, Aurora, Illinois.
J.F. Zievers, Vice President,	INDUSTRIAL FILTER & PUMP MFG. CO.,	5900 Ogden Ave., Chicago, Illinois.
W.V. Zievers, Vice President,	INDUSTRIAL FILTER & PUMP MFG. CO.,	5900 Ogden Ave., Chicago, Illinois.

TD
897.5
.O57
1970

17th Ontario waste
management conference :
proceedings /

76601